TM 11-2049

DEPARTMENT OF THE ARMY TECHNICAL MANUAL

TRANSMISSION MEASURING SET

TS-569/FT

DEPARTMENT OF THE ARMY • JUNE 1949

DEPARTMENT OF THE ARMY TECHNICAL MANUAL

TM 11-2049

TRANSMISSION MEASURING SET

TS-569/FT

DEPARTMENT OF THE ARMY • JUNE 1949

United States Government Printing Office
Washington: 1949

DEPARTMENT OF THE ARMY
Washington 25, D. C., *28 June 1949*

TM 11–2049, Transmission Measuring Set TS–569/FT, is published for the information and guidance of all concerned.

[AG 300.7 (6 Jul 48)]

BY ORDER OF THE SECRETARY OF THE ARMY:

OMAR N. BRADLEY
Chief of Staff,
United States Army

OFFICIAL:
EDWARD F. WITSELL
Major General
The Adjutant General

DISTRIBUTION:

Army:
Tech Sv (2); Arm & Sv Bd (1); AFF Bd (ea Sv Test Sec) (1); AFF (5); OS Maj Comd (5); Base Comd (3); MDW (5); A (ZI) (20), (Overseas) (5); CHQ (2); FC (2); USMA (2); Sch (2) except 11 (10); Gen Dep (10); Dep 11 (5) except Baltimore & Sacramento (20); Tng Div (2); PE (10), OSD (2); Lab 11 (2); 4th & 5th Ech Maint Shops 11 (2); T/O & E 11–47 (2); 11–107 (2); 11–127 (2); 11–587 (2); 11–592 (2); 11–597 (2); SPECIAL DISTRIBUTION.

Air Force:
USAF (5); USAF Maj Comd (5); USAF Sub Comd (3); Services (MATS) (2); Class III Instls (2); SPECIAL DISTRIBUTION.

For explanation of distribution formula, see SR 310-90-1.

Copyright Notice. This manual contains copyrighted material from the following publications: Bell Systems Practices, Section E40.225, 30A Transmission Measuring Set, 1 January 1938, copyright 1938 by the American Telephone and Telegraph Company; also Western Electric Company Handbook 82, Transmission Measuring Set 30A, 15 May 1947.

CONTENTS

			Paragraphs	Page
CHAPTER	1.	INTRODUCTION.		
Section	*I.*	General	1– 2	1
	II.	Description and data	3– 7	2
CHAPTER	2.	OPERATING INSTRUCTIONS.		
Section	*I.*	Service upon receipt of equipment	8–10	7
	II.	Controls and instruments	11–12	9
	III.	Operation	13–34	13
CHAPTER	3.	MAINTENANCE INSTRUCTIONS.		
Section	*I.*	Lubricants and preservatives	35–37	41
	II.	Preventive maintenance services	38–41	42
	III.	Trouble shooting	42–45	45
CHAPTER	4.	EQUIPMENT USED IN CONJUNCTION WITH TRANSMISSION MEASURING SET TS–569/FT	46–47	48
CHAPTER	5.	FIELD AND BASE MAINTENANCE INSTRUCTIONS.		
Section	*I.*	Condensed theory of operation	48–52	49
	II.	Test and repair equipment	53–54	53
	III.	Power requirements	55–56	55
	IV.	Inspecting, stripping, and cleaning	57–59	55
	V.	Trouble location	60–61	59
	VI.	Fits and tolerances	62–63	63
	VII.	Circuit data	64–67	66
	VIII.	Final testing	68–69	69
	IX.	Refinishing	70–71	71
APPENDIX	I.	SHIPMENT AND STORAGE		72
APPENDIX	II.	REFERENCES AND IDENTIFICATION TABLE OF PARTS		73
INDEX				80

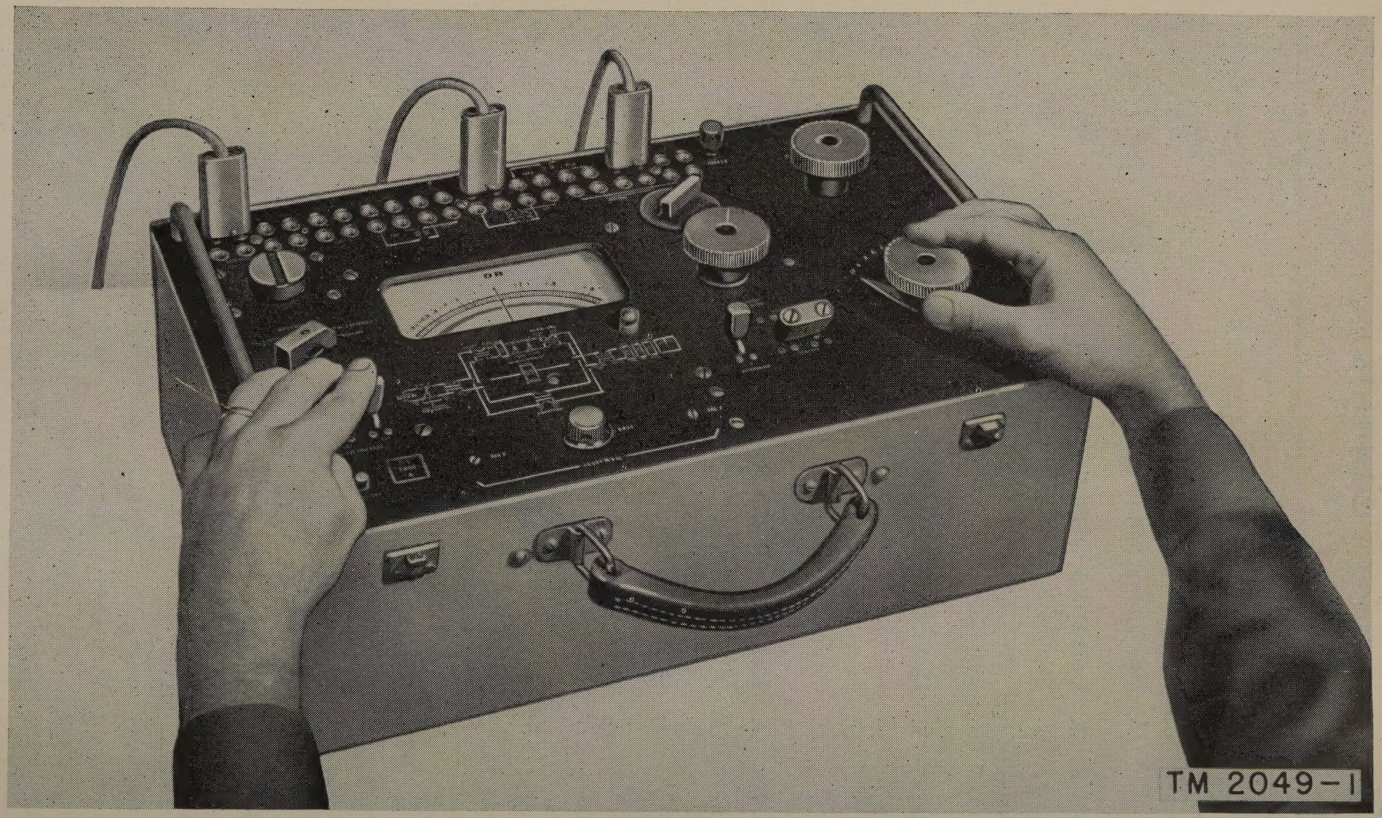

Figure 1. Transmission Measuring Set TS-569/FT.

CHAPTER I

INTRODUCTION

Section I. GENERAL

1. Scope

a. This manual is divided into five chapters containing detailed information on the operation, maintenance, theory, and repair of Transmission Measuring Set TS–569/FT. In addition, there are two appendixes covering shipment and storage information, a list of references, and an identification table of parts; an index concludes the manual.

b. Stock numbers appearing in this manual are from pamphlets of the Department of the Army Supply Catalog as listed in appendix II.

2. Forms and Records

a. FORMS. The following forms are used in reporting operations and maintenance of Transmission Measuring Set TS–569/FT.

WD AGO Form 468, Unsatisfactory Equipment Report.
AF Form 54, Unsatisfactory Report.

(1) *WD AGO Form 468 (Unsatisfactory Equipment Report) for equipment used by the Army.* WD AGO Form 468 will be filled out and forwarded through channels to the Office of the Chief Signal Officer, Washington 25, D. C., when trouble occurs more often than is normal, as determined by qualified repair personnel.

(2) *AF Form 54 (Unsatisfactory Report) for equipment used by the Air Force.* AF Form 54 will be filled out and forwarded to Commanding General, Air Matériel Command, Wright-Patterson Air Force Base, Dayton, Ohio, in accordance with AF Regulation 15–54.

b. OTHER FORMS AND RECORDS. Use other forms and records as authorized.

Section II. DESCRIPTION AND DATA

3. General

a. Transmission Measuring Set TS–569/FT (WECo 30A) (fig. 1) is used in making measurements over carrier telephone and carrier telegraph equipment, such as J-, K-, or C-type carrier. The set consists essentially of a thermocouple, a meter, attenuators, keys, and jacks arranged to facilitate the various types of tests for which the set was designed, and to provide a means for calibrating the measuring elements of the set. The transmission measuring set operates in the 35- to 150,000-cy (cycle) frequency range. The following measurements may be made on 135- and 600-ohm circuits:

(1) Gain measurements.

(2) Power or straightaway measurements.

(3) Loss measurements.

(4) Line loss measurements.

b. The testing signal required for making all measurements except power measurements is obtained from a separate source of power, such as Oscillator TS–401/U (WECo 51A oscillator) (see par. 46). In making power measurements, power is obtained from the circuit under test.

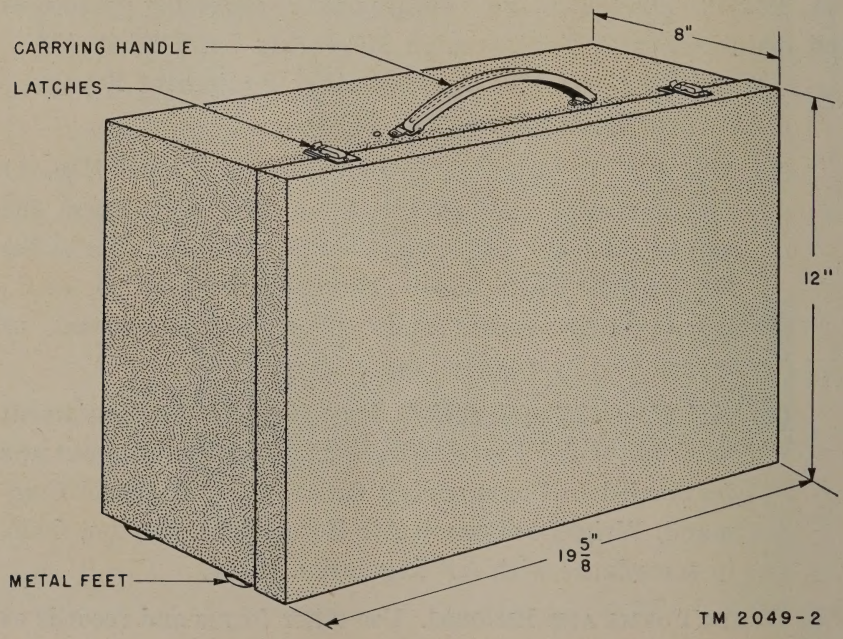

Figure 2. Transmission Measuring Set TS–569/FT, physical dimensions.

4. Physical Description

a. Transmission Measuring Set TS–569/FT is contained in a metal case (fig. 2) equipped with a leather carrying handle and four metal feet to protect the bottom of the case. The case has a detachable cover held in place by four latches. The over-all dimensions of the case are 19⅝ inches long by 8 inches deep by 12 inches high. The total weight of the case and set is approximately 70 pounds; the volume is approximately 1¼ cubic feet.

b. The transmission measuring set requires one 1.5-v (volt) battery, type BA–30, for calibrating the current measuring circuit. Two clips for mounting spare batteries are provided inside the top cover of the carrying case. Four patching cords are supplied with, but are not part of Transmission Measuring Set TS–569/FT. Each cord is 6 feet long with WECo 241A plugs on each end.

c. All controls, jacks, keys, etc., are mounted on the top panel of the set (fig. 3) which is exposed by removing the cover of the case. Designations for all controls and a circuit schematic for the set are etched on the control panel.

5. Equipment Features

Transmission Measuring Set TS–569/FT consists essentially of two circuits—a current measuring circuit, and a comparison circuit. Description of these circuits follows.

a. Current Measuring Circuit. This circuit consists of a meter, a thermocouple with its associated calibration circuit, various potentiometers, and 3 meter protection pads of 10 db (decibels) each. The functions performed by this circuit are current measuring and calibration. These operations are selected by the calibrate-measure switch on the control panel (fig. 3) of the set. The calibration circuit provides a means for adjusting the sensitivity of the thermocouple and meter which are the current measuring elements of the set.

b. Comparison Circuit. This circuit consists of a potentiometer, a variable attenuator, and various jacks at different points in the circuit to afford flexibility of connection in performing the different types of tests. This circuit provides two paths between the source of test current and the current measuring circuit. These paths are selected by the ADJUST-COMPARE key on the control panel (fig. 3) of the set. When the key is in the normal position, the circuit is open; when the key is in the COMPARE position, a path is provided from the source of test current to the current measuring circuit; when the key is in the ADJUST position, a

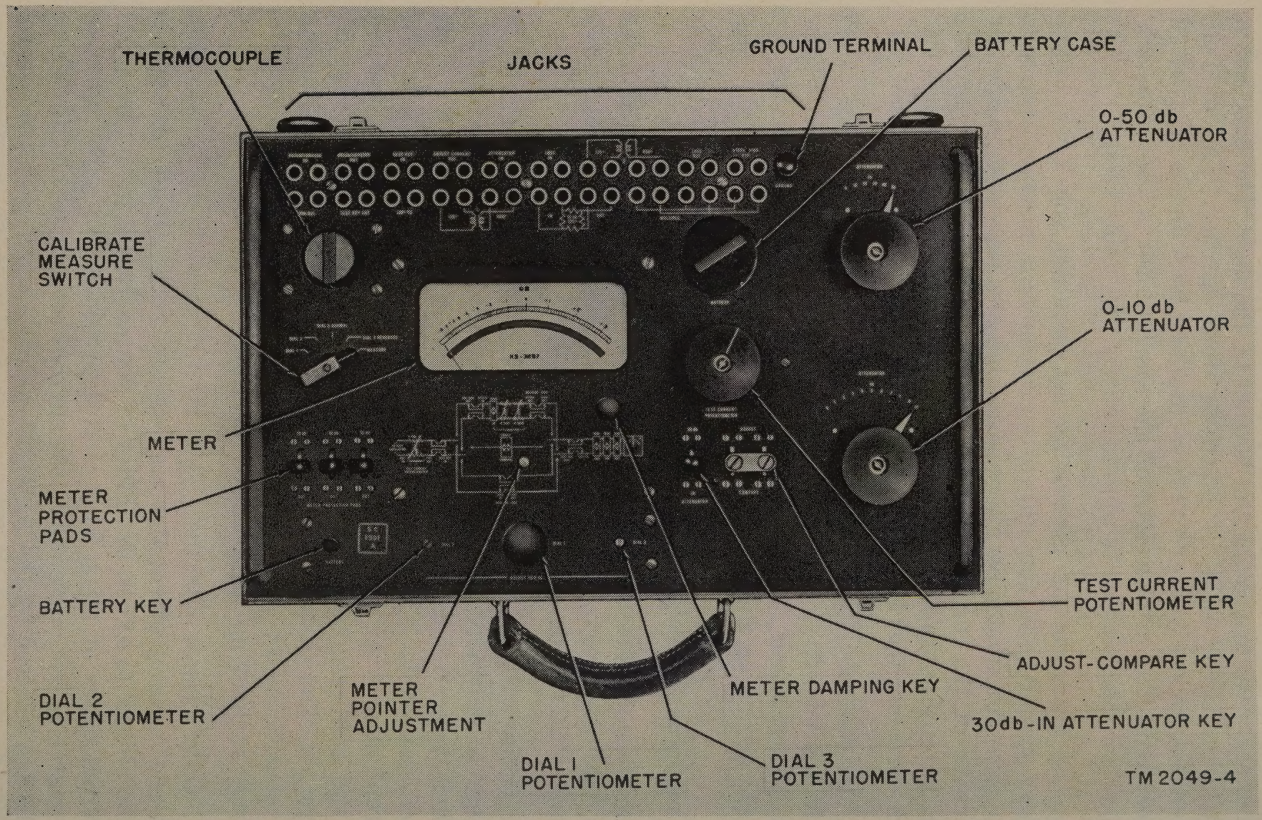

Figure 3. Transmission Measuring Set TS-569/FT, control panel.

path is provided from the source of test current through the variable attenuator and associated jacks to the current measuring circuit. The circuit under test can be inserted in either the COMPARE or ADJUST path depending on the type of measurements being made. This provides a means for setting up two circuit paths for comparison purposes.

6. Characteristics

The characteristics of Transmission Measuring Set TS–569/FT are given below. The technical characteristics of the main circuit elements of the set are listed in *a* below. The performance characteristics of the transmission measuring set are listed in *b* below.

a. Technical Characteristics.

Meter	D-c (direct current) milliameter calibrated in db, extends from −10 db to +3.4 db with 0-db index near midscale; current for full-scale deflection, about 200 microamperes dc.
Thermocouple	WECo 22AM thermocouple with heater resistance between 80 and 100 ohms.
Battery	Dry cell, type BA–30, 1.5 volts, approximate battery life is 6 months.
Test current potentiometer	Provides attentuation range between 5 db and 7 db.
Attentuators	Designed to accept power up to about 6 w (watts); loss of attentuators will be within 0.1 db.
Resistance pads	Designed to accept power up to about 6 watts; have accuracy of better than ±0.5 db of their nominal value.
Repeating coils	Have an impedance ratio of 135:600 ohms.

b. Performance Characteristics.

Gain measurements	Gains up to 90 db and, with limitations, gains up to 120 db can be measured.
Loss measurements	Using an external amplifier and a sending source of more than 1 mw (milliwatt), losses from 0 to 90 db can be measured. The loss measuring range can be extended by additional amplification with some loss in accuracy.
Power measurements	Output power can be measured from 10 db below 1 mw up to 37.8 db above 1 mw.
Testing range	From 35 cycles to 150,000 cycles on 135- and 600-ohm circuits.
Impedance	Impedance of the transmission measuring set is 135 ohms including attenuators, pads, and thermocouple circuit. Two coils having an impedance ratio of 135:600 ohms are included to permit measurements of 600-ohm circuits.
Over-all accuracy	The over-all accuracy varies somewhat with the type of measurement, but, in general, an accuracy of ±0.2 db or better may be expected.

7. Packaging Data

a. When packing for export shipment, place Transmission Measuring Set TS–569/FT in moisture-vaporproof containers and pack in a wooden crate. A cutaway view of a typical set packed for export is shown in figure 4. The size, weight, and volume of the packed equipment are given in the following chart:

Height (in.)	Width (in.)	Depth (in.)	Volume (cu ft)	Weight (lb)
21	29	17	3¾	140

b. Package the transmission measuring set in accordance with the following procedures:

(1) Cushion the set on all surfaces with cells and/or pads of corrugated fiberboard. Place the cushioned set, together with technical manuals and desiccant, within a close-fitting corrugated box.

(2) Place the boxed set within a moisture-vaporproof barrier and heat-seal the closure.

(3) Place the moisture-vaporproof set within a second corrugated fiberboard box with the entire inclosure sealed with water-resistant tape or adhesive.

(4) Place the box within a nailed wooden shipping container which is lined with a sealed waterproof bag. If it is to be shipped overseas, bind the box with two metal straps.

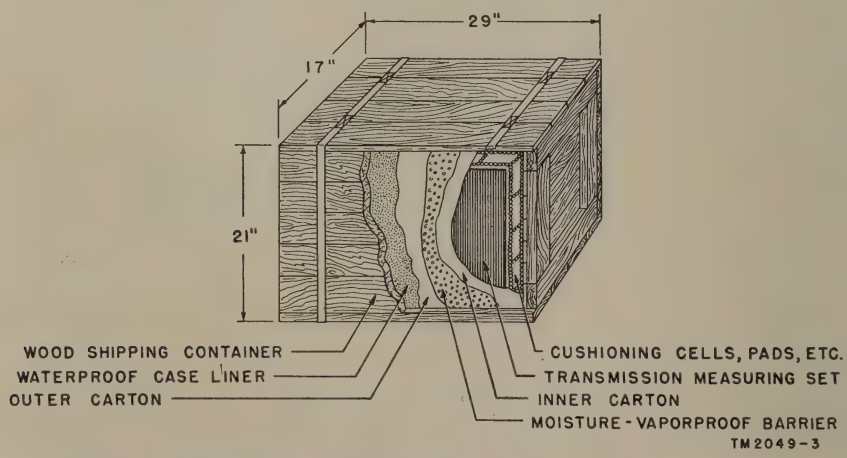

Figure 4. Packaging of Transmission Measuring Set TS–569/FT.

CHAPTER 2

OPERATING INSTRUCTIONS

Section I. SERVICE UPON RECEIPT OF EQUIPMENT

8. Service Upon Receipt of New Equipment

a. UNCRATING, UNPACKING, AND CHECKING. Equipment may be shipped in oversea packing cases or in domestic packing cases and sometimes in its own carrying case. When new equipment is received, select a location where the equipment may be unpacked without exposure to the elements. When uncrating and unpacking Transmission Measuring Set TS–569/FT (fig. 4), be careful not to injure the equipment by thrusting tools into the interior of the container. Do not damage the packaging material more than necessary. After the test set has been unpacked, store the inside packaging material in the shipping container for future use. Equipment shipped in its own carrying case requires no special unpacking instructions aside from checking to determine that the equipment is not damaged.

b. STEP-BY-STEP INSTRUCTIONS FOR UNCRATING AND UNPACKING EXPORT SHIPMENTS (fig. 4).

(1) Cut and fold back the metal straps.

(2) Remove the nails with a nail puller and lift off the top of the shipping container.

(3) Cut the tape and seals of the case liner so that the waterproof paper is damaged as little as possible.

(4) Lift out the fiberboard pads used for blocking and bracing the equipment.

(5) Lift out the packaged test set. Carefully remove the waterproof wrap.

(6) Cut the tape sealing the top flaps of the carton in such a way as to leave the carton undamaged. Open the carton and remove the moisture-vaporproofed package.

(7) Cut off the moisture-vaporproof barrier. Remove the inner carton.

(8) Open the inner box and remove the top cushioning cells and/or pads. Remove the desiccant and packaged technical manuals. Lift out the measuring set.

(9) Store the interior packaging material (except the desiccant) in the inner carton for future use.

(10) Thoroughly inspect the equipment for possible damage during shipment.

(11) Check the contents of the packing case against the master packing slip.

c. UNPACKING DOMESTIC PACKING CASES. The instructions given in *b* above apply to unpacking domestic shipments with the exception of cutting the metal bands. Domestic packing cases are not bound with metal straps.

9. Preparation for Use

a. Remove the cover from the case of the transmission measuring set.

b. Check the control panel for chips, cracks, and damaged parts.

c. Check the switches, keys, and other controls for ease of movement and positive action.

d. Remove all dust, dirt, and grease accumulations by wiping with a clean, dry cloth.

e. Remove one of the batteries from its mounting inside the top cover of the carrying case.

f. Install this battery in the battery case located at the upper right-hand corner of the control panel as follows:

(1) Remove the cap from the battery case by rotating the cap one-quarter turn counterclockwise and then lifting it off.

(2) Place the 1.5-volt Battery BA–30 in the compartment with the center terminal at the top.

(3) Replace the cap, making sure that the spring has sufficient tension to cause the battery to make contact with the bar across the bottom of the cap.

g. Information concerning grounding arrangements, calibration of the test set, test precautions, and operating procedures is contained in section III of this chapter. Read these instructions carefully before using the transmission measuring set.

10. Service Upon Receipt of Used or Reconditioned Equipment

a. Follow the instructions in paragraphs 8 and 9 for uncrating, unpacking, and checking the equipment and preparing it for use.

b. Check the used or reconditioned equipment for tags or other indications pertaining to changes in the wiring of the equipment. If any changes in the wiring have been made, note the change in this manual, preferably on the schematic diagram.

Note. Instructions and precautions for operation and maintenance of used or reconditioned equipment are the same as for new equipment.

Section II. CONTROLS AND INSTRUMENTS

11. Controls

a. The table below lists the controls on the transmission measuring set and gives the location on the control panel (fig. 3) and the function of each control. See paragraph 52 for additional information concerning the function of the controls.

Control	Location	Function
Meter damping key	Center of panel below meter.	A nonlocking, push-button key which protects the meter while the set is in transit. When the cover is placed on the set, a felt pad depresses the key, thereby shorting out the meter.
Calibrate-measure switch (S–1).	Left side of panel	A five-position wafer switch used for calibrating the set and for making measurements. The five positions are: DIAL 1, DIAL 2, DIAL 3 NORMAL, DIAL 3 REVERSED, and MEASURE. The first four positions are used only for calibration; the fifth position is used for making measurements.
BATTERY key (S–5).	Lower left corner of panel.	A nonlocking, push-button key used only when the set is being calibrated. When this key is operated the battery current is supplied to the current measuring circuit.
METER PROTECTION PADS (S–4).	Lower left side of panel	These are three resistance pads which are normally in the circuit when the calibrate-measure switch is in the MEASURE position. They are operated by three nonlocking keys which, when held in the OUT position, remove a total of 30 db from the circuit. These pads provide protection for the thermocouple.

Control	Location	Function
Meter pointer adjustment.	Directly below meter	A screw driver-adjusted control used to adjust the meter pointer to the *no current* index line below the −10 db mark on the meter scale.
DIAL 1 potentiometer (R–3).	Lower part of panel below meter.	When the calibrate-measure switch is in the DIAL 1 position, this control adjusts the battery current to the meter in order to obtain a reading of 0 db on the meter scale.
DIAL 2 potentiometer (R–2).	Left of DIAL 1 potentiometer.	When the calibrate-measure switch is in the DIAL 2 position, this screw driver-adjusted control adjusts the resistance of the thermocouple heater circuit to obtain a reading of 0 db on the meter scale.
DIAL 3 potentiometer (R-4).	Right of DIAL 1 potentiometer.	When the calibrate-measure switch is in the DIAL 3 NORMAL or DIAL 3 REVERSED position, this screw driver-adjusted control calibrates the thermocouple and meter circuit to give a 0-db reading with 1 mw of power in the heater circuit.
TEST CURRENT POTENTIOMETER (R–1).	Right of meter	A slide wire potentiometer having a 2-db range (5- to 7-db loss). This control is provided to permit a precise adjustment of the input test power.
30-db IN ATTENUATOR key (S–2).	Under TEST CURRENT POTENTIOMETER.	Provides 30-db attenuation which is controlled by a locking key, and is normally out of the circuit.
ADJUST-COMPARE key (S–3).	Right of 30-db IN ATTENUATOR.	A three-position switch which provides a means for setting up two circuit paths for comparison purposes. The three positions of the switch are: ADJUST, normal, and COMPARE. When the switch is in the normal position, the circuit is open. The ADJUST and COMPARE positions select the corresponding circuit paths.
0–50-db ATTENUATOR (E–2).	Upper right corner of panel.	Used to increase or decrease attenuation in the circuit over a range of 0 to 50 db in steps of 10 db.

Control	Location	Function
0-10-db ATTENUATOR (E-3).	Lower right corner of panel.	Used to increase or decrease attenuation in the circuit over a range of 0 to 10 db in steps of 1 db.
Thermocuple (E-1)	Upper left corner of panel.	Provides a means for measuring current by developing a thermoelectric voltage which is measured by the meter.

b. The jacks (J–1 through J–40) are located across the upper part of the panel (fig. 5) and are used for making various connections to the power source and the circuits under test. The reference numbers J–1 through J–40 do not appear on the control panel of the set, but have been assigned to simplify the identification of each jack. The following subparagraphs identify the jacks and give the function and type of connection for which each jack is used.

(1) Jacks J–1 and J–2 make up the POTENTIOMETER IN connection. The oscillator, which is the source of test current in making all gain and loss measurements, is connected to the transmission measuring set through these jacks.

(2) Jacks J–3 and J–4 make up the POTENTIOMETER OUT connection. They are used only in making loss measurements over 10 db on 135- and 600-ohm circuits.

(3) Jacks J–5 and J–6 make up the TEST KEY IN connection. They are used only in making loss measurements over 10 db on 135- and 600-ohm circuits.

(4) Jacks J–7 and J–8 make up the ADJUST CURRENT OUT connection. They are used only in making loss measurements over 10 db on 135- and 600-ohm circuits.

(5) Jacks J–9 and J–10 make up the ATTENUATOR IN connection. They are used only in making loss measurements over 10 db on 135- and 600-ohm circuits.

(6) Jacks J–11 and J–12 make up the LOSS IN connection. They are used in making all loss measurements on 135- and 600-ohm circuits.

(7) Jacks J–13 through J–16, J–27 through J–30 are used in making all measurements on a 600-ohm circuit. These jacks are used with impedance matching coils to permit measurements on 600-ohm circuits.

(8) Jacks J–17 and J–18 make up the LOSS OUT connection. They are used only in making loss measurements on 135- and 600-ohm circuits.

(9) Jacks J–19 and J–20 make up the ATTENUATOR OUT connection. They are used in making gain and loss measurements over 10 db on 135- and 600-ohm circuits.

(10) Jacks J–21 and J–22 make up the GAIN OUT connection. They are used in making gain and loss measurements over 10 db on 135- and 600-ohm circuits.

(11) Jacks J–23 and J–24 make up the TEST KEY OUT connection. They are used in making loss measurements over 10 db on 135- and 600-ohm circuits.

(12) Jacks J–25 and J–26 make up the 135 OHM T.C. connection. They are used in making loss measurements over 10 db on 135- and 600-ohm circuits.

(13) Jacks J–31 through J–34 make up the IN–OUT connection for the 10-db 135-ohm pad. They may be used to supply an additional 10 db when required for tests.

(14) Jacks J–35 through J–40 make up the MULTIPLE connections and may be used to connect two or three circuits together as required.

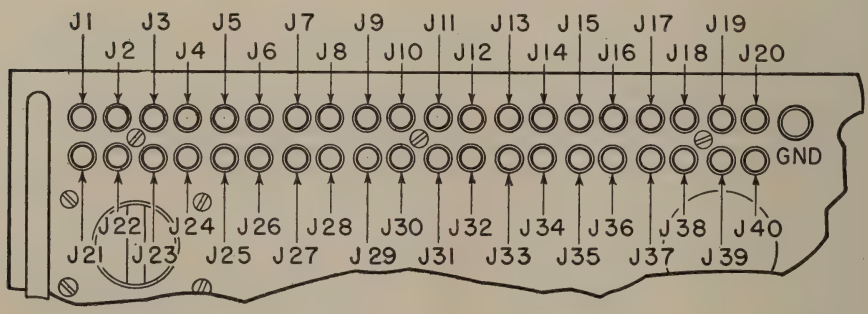

TM 2049-5

Figure 5. Section of control panel showing position of jacks.

12. Instruments

a. General. The only instrument used in Transmission Measuring Set TS–569/FT is the meter. A description of the meter and its function follows.

b. Meter (M–1). The meter, located below the row of jacks on the control panel, is a milliammeter having a resistance of 10 ohms and a full-scale deflection at about 200 microamperes dc.

The meter scale is calibrated in db with reference to 1 mw and extends from —10 db to +3.4 db with the 0-db index near midscale. The meter is equipped with a meter shunt which is of such value that when 2.722 ma (milliamperes) flow through it, the meter registers at the 0-db mark on the scale.

Section III. OPERATION

13. Equipment Connections

a. GROUNDING ARRANGEMENTS. Ground the sleeves of the jacks of the test current supply so that ground for the transmission measuring set can be picked up automatically by using a three-conductor cord in patching from the jacks of the test current supply to the jacks of the transmission measuring set. Otherwise, it will be necessary to supply a ground lead to the ground terminal on the control panel (fig. 3) of the set. The set ground is wired to the sleeves of all jacks, the shield of the paired wiring, the covers of the attenuators, and then grounded to the chassis of the set.

b. CONNECTIONS. Connections as required by the different tests and measurements made with Transmission Measuring Set TS–569/FT will be covered in the separate instructions for each type of test. These tests are described in the following paragraphs.

14. Calibration

Before using Transmission Measuring Set TS–569/FT, calibrate the current measuring circuit for 1 mw through 135 ohms, using the calibration circuit contained within the set. Current for calibration is supplied by a 1.5-volt Battery BA–30 within the set. Calibrate the transmission measuring set before each group of measurements is made, and each time the set is moved to a different location. The calibration procedure is as follows:

a. Set the calibrate-measure switch (S–1) to DIAL 1 position (R–3).

b. Hold down the BATTERY key (S–5).

c. Adjust DIAL 1 to get a reading of exactly 0 db at midscale of the meter.

d. Release the BATTERY key.

Note. Do not change the setting of DIAL 1 during the remaining steps of calibration.

e. Set the calibrate-measure switch to DIAL 2 (R–2).

f. Hold down the BATTERY key.

g. Turn the screw driver adjustment marked DIAL 2 to obtain a reading of exactly 0 db at midscale of the meter. Do not change the setting of DIAL 2 during the remaining steps of calibration.

h. Release the BATTERY key.

i. Set the calibrate-measure switch (S–1) to the DIAL 3 NORMAL position.

j. Hold down the BATTERY key.

k. Turn the screw driver adjustment marked DIAL 3 (R–4) to get a reading of exactly 0 db at midscale of the meter.

l. Release the BATTERY key.

m. Set the calibrate-measure switch to the DIAL 3 REVERSED position. This reverses the flow of current through the meter.

n. Hold down the BATTERY key.

o. The meter reading should be 0 db but, because of the variation in the thermocouples, it may be slightly off. In this case, readjust DIAL 3 so that with the heater current flowing in one direction (DIAL 3, NORMAL position), equal deflection will be shown on the meter when the current is reversed (DIAL 3 REVERSED position).

p. Release the BATTERY key.

q. Set the calibrate-measure switch (S–1) to MEASURE position. The set is now ready for making transmission measurements.

15. Operation

The method of using the transmission measuring set for measuring gain, loss, received power, and line attenuation, as described below, represents typical uses of the set. The set is quite flexible, however, and may be used in a variety of ways, so long as care is exercised in its use regarding load capacity, etc. Uses of the set in making tests on any system, in addition to those described below, ordinarily will be covered in tests of such a system. The following paragraphs contain specific instructions for making the tests and measurements most frequently performed with Transmission Measuring Set TS–569/FT.

16. Test Precautions

a. In using the measuring set, keep the readings on the meter within 1 db of the 0-db point in order to obtain maximum accuracy. A test is given in paragraph 31 for checking and improving the accuracy of the meter scale. Perform this test whenever the meter readings fall outside of the + or —1-db marks on the scale.

b. Ground the set properly either by using a three-conductor patch cord and jacks having their sleeves grounded, or by supplying a separate ground to the GROUND post on the control panel of the set.

c. Heavy surges or overloads into the meter may result in burning out the thermocouple or modifying its characteristics so that recalibration is necessary. Consequently, always operate the meter protection pad keys one at a time, and only when the meter reads less than —7 db.

d. Unless otherwise specified, set the attenuators for maximum loss at the beginning of each measurement.

e. Be sure can covers are in place on circuits being tested and on all adjacent circuits. When a test is made with a can cover removed, all adjoining circuits must have their covers in place.

f. All voltages must be within specified limits.

g. Keep brass connecting cord plugs polished.

h. Do not subject the heater of the thermocouple to more than 6 db above 1 mw because of the danger of either changing its characteristics or burning it out.

i. The attenuators and meter protection pads will accept power up to about 6 watts without danger of damage.

j. Do not leave the measuring set connected into a circuit which has an output exceeding 30 db above 1 mw for an excessive length of time.

17. Gain Measurements at Zero Power on 135-ohm Circuits

For making gain measurements by constant output at zero power, refer to figure 6 and the following procedure:

a. Patch from the source of test current to the POTENTIOMETER IN jacks (J–1, J–2).

b. Set the ADJUST-COMPARE key (S–3) to the COMPARE position.

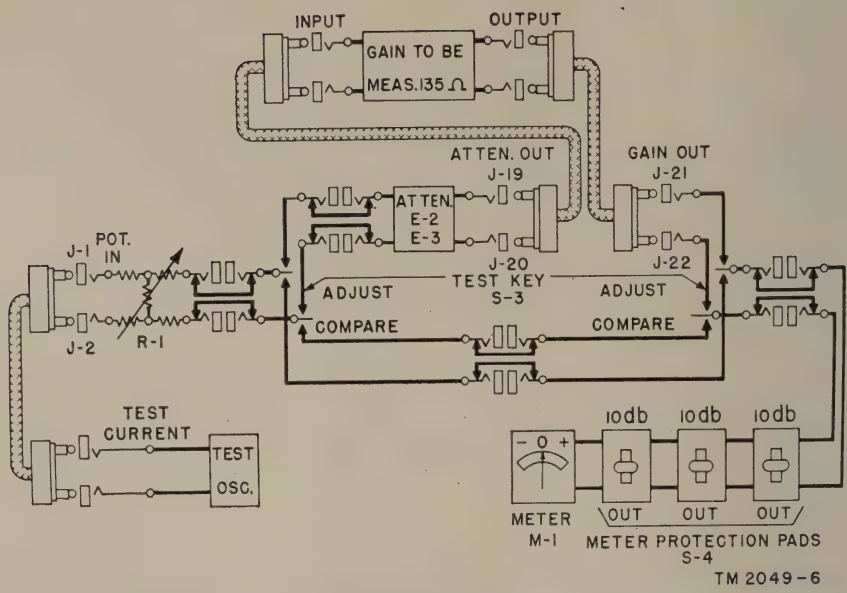

Figure 6. Simplified schematic for gain measurements on 135-ohm circuits.

c. Adjust the oscillator output and TEST CURRENT POTENTIOMETER (R–1) to obtain a 0-db reading on the meter scale with all METER PROTECTION PAD keys (S–4) in the OUT position.

d. Set the ATTENUATOR (E–2) at 50 db, and the ATTENUATOR (E–3) at 10 db.

Caution: If the circuit under test has an expected gain of more than 60 db, set the 30-db IN ATTENUATOR key (S–2) to the IN ATTENUATOR position to avoid serious damage to the thermocouple; J- and K-type amplifiers will exceed 60 db when there is trouble in the feedback circuit.

e. Patch the ATTENUATOR OUT jacks (J–19 and J–20) to the input of the 135-ohm circuit under test.

f. Patch the output of the circuit under test to the GAIN OUT jacks (J–21, J–22).

g. Set the ADJUST-COMPARE key (S–3) to the ADJUST position, and change the setting of the ATTENUATORS (E–2, E–3) to obtain a meter reading as near 0 db as possible with the three METER PROTECTION PADS (S–4) in the OUT position.

h. The gain of the circuit is the setting of the attenuators plus the algebraic value of the meter reading, that is, meter readings

below 0 db are subtracted from the attenuator setting, whereas meter readings above 0 db are added to the attenuator setting.

18. Gain Measurements at Zero Power on 600-ohm Circuits

For making gain measurements on 600-ohm circuits by constant output at zero power, refer to figure 7 and the following procedure:

a. Patch from the source of test current to the POTENTIOMETER IN jacks (J–1, J–2).

b. Set the ADJUST-COMPARE key (S–3) to the COMPARE position.

c. Adjust the oscillator output and the TEST CURRENT POTENTIOMETER (R–1) to obtain a 0-db reading on the meter scale with all METER PROTECTION PADS (S–4) in the OUT position.

d. Set the ATTENUATOR (E–2) at 50 db, and the ATTENUATOR (E–3) at 10 db.

Caution: If the circuit under test has an expected gain of more than 60 db, set the 30-db IN ATTENUATOR key (S–2) to the IN ATTENUATOR position to avoid serious damage to the

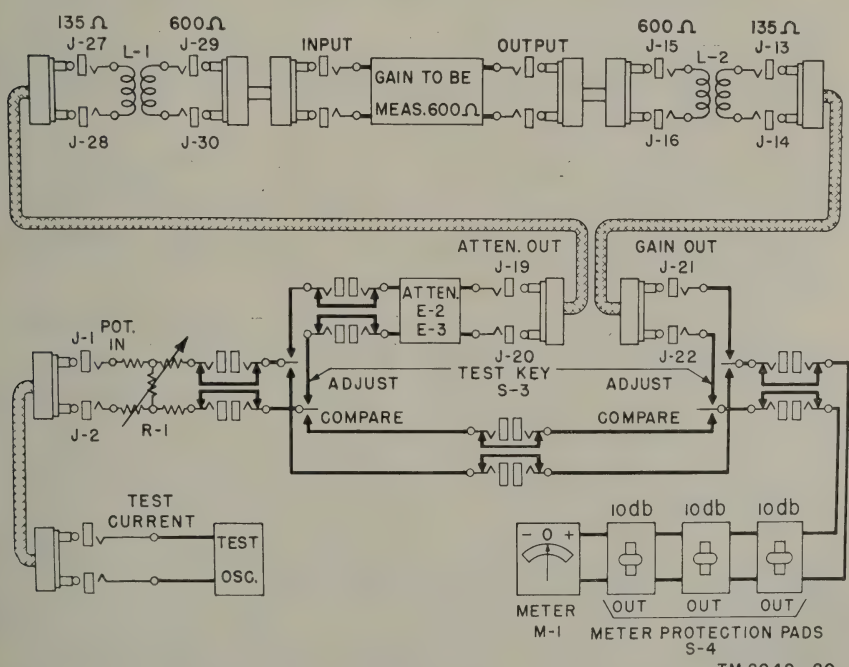

Figure 7. Simplified schematic for gain measurements on 600-ohm circuits.

thermocouple. J- and K-type amplifiers will exceed 60 db when there is trouble in the feedback circuit.

e. Patch the 135-ohm side of repeating coil L–1 (J–27, J–28) to the ATTENUATOR OUT jacks (J–19, J–20).

f. Patch the 600-ohm side of repeating coil L–1 (J–29, J–30) to the input of the 600-ohm circuit under test.

g. Patch the output of the circuit under test to the 600-ohm side of repeating coil L–2 (J–15, J–16).

h. Patch the 135-ohm side of repeating coil L–2 (J–13, J–14) to the GAIN OUT jacks (J–21, J–22).

i. Set the ADJUST-COMPARE key (S–3) to the ADJUST position and change the setting of the ATTENUATORS (E–2, E–3) to obtain a meter reading as near 0 db as possible with the three METER PROTECTION PADS (S–4) in the OUT position.

j. The gain of the circuit is the setting of the attenuators plus or minus the meter reading. When making this test, the loss in the repeating coils must be accounted for, and this loss must be added to the attenuator setting. Refer to paragraph 30 to determine this loss.

19. Gain Measurements Exceeding 0 dbm on 135-ohm Circuits

For gain measurements at an output power greater than 0 dbm (decibels with respect to a 1 mw reference level), refer to figure 8 and the following procedure:

a. Patch the source of test current to the POTENTIOMETER IN jacks (J–1, J–2).

b. Set the ADJUST-COMPARE key (S–3) to the COMPARE position.

c. Adjust the oscillator output and TEST CURRENT POTENTIOMETER (R–1) to obtain a 0-db reading on the meter scale with all METER PROTECTION PADS (S–4) in the OUT position.

d. Set the ATTENUATOR (E–2) at 50 db, and the ATTENUATOR (E–3) at 10 db.

Caution: If the circuit under test has an expected gain of more than 60 db, set the 30-db IN ATTENUATOR key (S–2) to the IN ATTENUATOR position to avoid serious damage to the thermocouple. J- and K-type amplifiers will exceed 60 db when there is trouble in the feedback circuit.

e. Patch the ATTENUATOR OUT jacks (J–19, J–20) to the input of 135-ohms circuit under test.

f. Patch the output of the circuit under test to the IN jacks of the 10-db 135-ohm pad (J–31, J–32).

g. Patch the OUT jacks of the 10-db 135-ohm pad (J–33, J–34) to the GAIN OUT jacks (J–21, J–22).

h. Set the ADJUST-COMPARE key (S–3) to the ADJUST position and change the setting of the ATTENUATORS (E–2, E–3) to obtain a meter reading as near 0 db as possible with all METER PROTECTION PADS (S–4) in the OUT position.

i. The gain of the circuit is the sum of the setting of the attenuators and the 10-db pad plus or minus the meter reading.

Caution: Before making this measurement, be certain that no apparatus in the circuit under test will be damaged by overload.

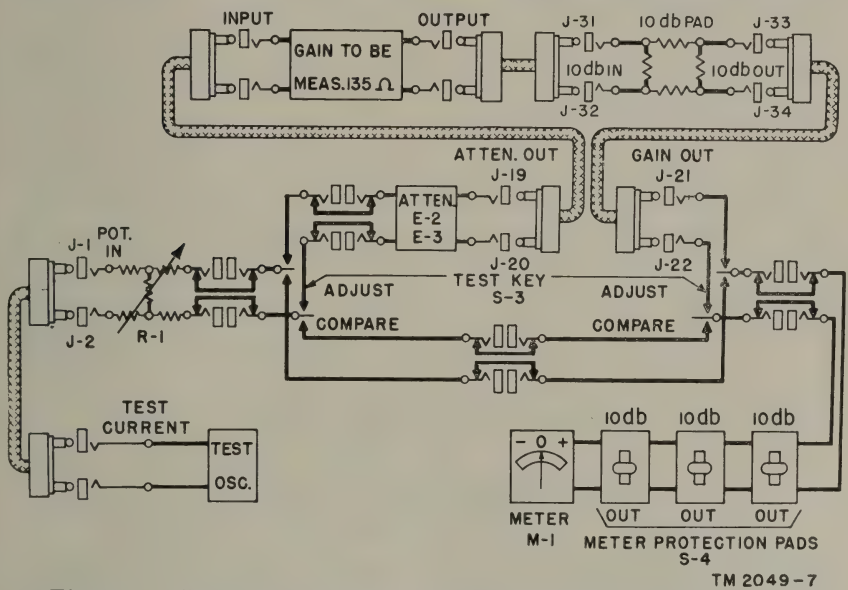

Figure 8. Simplified schematic for gain measurements exceeding 0 dbm on 135-ohm circuits.

20. Gain Measurements Exceeding 0 dbm on 600-ohm Circuits

For gain measurements exceeding 0 dbm on 600-ohm circuits, refer to figure 9 and the following procedure:

a. Patch the source of test current to the POTENTIOMETER IN jacks (J–1, J–2).

b. Set the ADJUST-COMPARE key (S–3) to the COMPARE position.

c. Adjust the oscillator output and TEST CURRENT POTENTIOMETER (R–1) to obtain a meter reading as near 0 db as possible with all METER PROTECTION PADS (S–4) in the OUT position.

d. Set the ATTENUATOR (E–2) at 50 db, and the ATTENUATOR (E–3) at 10 db.

Caution: If the circuit under test has an expected gain of more than 60 db, set the 30-db IN ATTENUATOR key (S–2) to the IN ATTENUATOR position to avoid serious damage to the thermocouple. J- and K-type amplifiers will exceed 60 db when there is trouble in the feedback circuit.

e. Patch the ATTENUATOR OUT jacks (J–19, J–20) to the 135-ohm side of repeating coil L–1 (J–27, J–28).

f. Patch the 600-ohm side of repeating coil L–1 (J–29, J–30) to the input of the 600-ohm circuit under test.

g. Patch the output of the circuit under test to the 600-ohm side of repeating coil L–2 (J–15, J–16).

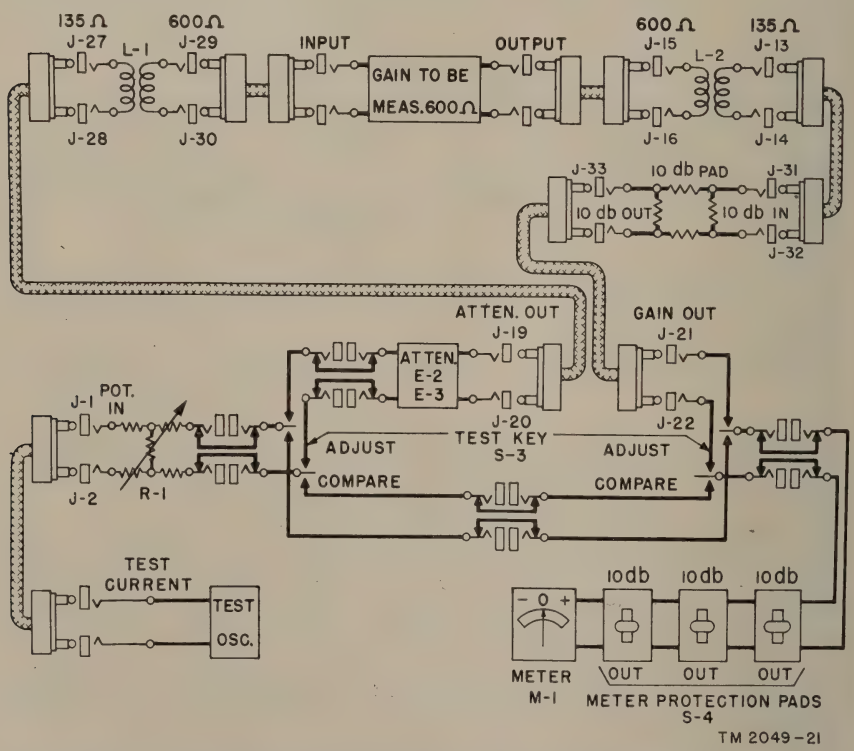

Figure 9. Simplified schematic for gain measurements exceeding 0 dbm on 600-ohm circuits.

h. Patch the 135-ohm side of repeating coil L–2 (J–13, J–14) to the 10-db IN side of the 10-db 135-ohm pad (J–31, J–32).

i. Patch the 10-db OUT side of the 10-db 135-ohm pad (J–33, J–34) to the GAIN OUT jacks (J–21, J–22).

j. Set the ADJUST-COMPARE key (S–3) to the ADJUST position, and change the setting of the ATTENUATORS (E–2, E–3) to obtain a meter reading as near 0 db as possible with the three METER PROTECTION PADS (S–4) in the OUT position.

k. The gain of the circuit is the sum of the setting of the attenuators and the 10-db pad plus or minus the meter reading. The loss of the two repeating coils (L–1, L–2) must be added to the attenuator setting. Refer to paragraph 30 to determine this loss.

21. Power Measurements on 135-ohm Circuits

For power measurements on 135-ohm circuits, refer to figure 10 and the following procedure:

a. Patch the ATTENUATOR IN jacks (J–9, J–10) to the 135-ohm circuit under test.

b. Set the ADJUST-COMPARE key (S–3) to the ADJUST position.

c. With the three METER PROTECTION PADS (S–4) in the OUT position, set the ATTENUATOR (E–2) to 50 db, and the ATTENUATOR (E–3) to 10 db; reduce the ATTENUATOR

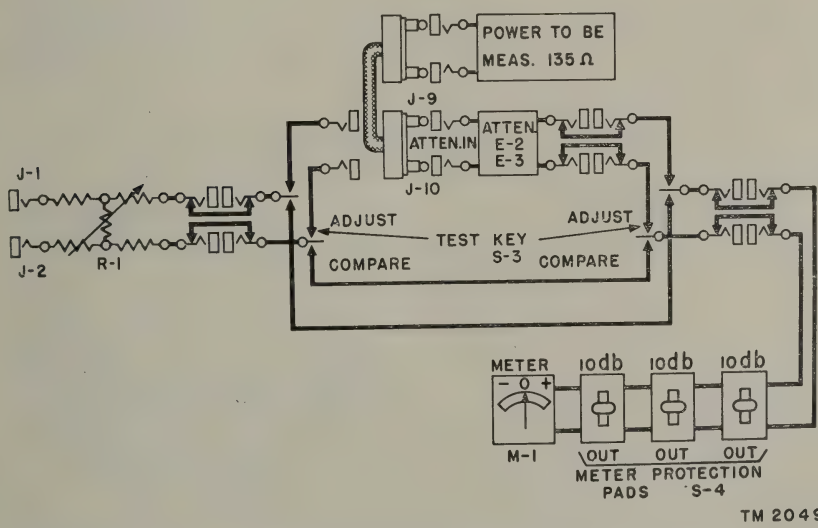

Figure 10. Simplified schematic for power measurements on 135-ohm circuits.

(E–2) in 10-db steps until a slight reading is shown on the meter scale. Then decrease the ATTENUATOR (E–3) in 1-db steps until the meter reading is as close to 0 db as possible.

d. The power from the circuit under test, as compared to 1 mw, is equal to the setting of the attenuators plus or minus the meter reading. The loss in the patching cords should be added to this value. Refer to paragraph 30 for procedure in determining loss in patching cords.

22. Power Measurements on 600-ohm Circuits

For power measurements on 600-ohm circuits, refer to figure 11 and the following procedure:

a. Patch the 600-ohm circuit under test to the 600-ohm side of repeating coil (L–1) (J–29, J–30).

b. Patch the 135-ohm side of repeating coil (L–1) (J–27, J–28) to the ATTENUATOR IN jacks (J–9, J–10).

c. Set the ADJUST-COMPARE key (S–3) to the ADJUST position.

d. Set the ATTENUATOR (E–2) at 50 db, and the ATTENUATOR (E–3) at 10 db.

e. With the three METER PROTECTION PADS (S–4) in the OUT position, reduce the ATTENUATOR (E–2) in 10-db steps

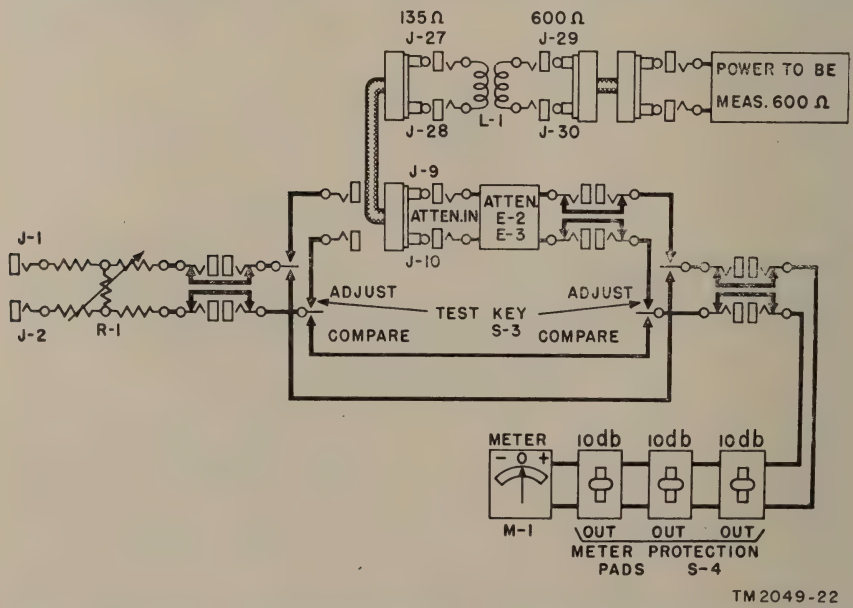

Figure 11. Simplified schematic for power measurements on 600-ohm circuits.

until a slight reading is shown on the meter scale. Then decrease the ATTENUATOR (E–3) in 1-db steps until the meter reading is as close to 0 db as possible.

f. The power from the circuit under test, as compared to 1 mw, is equal to the setting of the attenuators plus or minus the meter reading. The loss in the patching cords and in the repeating coil (L–1) should be added to this value; refer to paragraph 30 for procedure in determining loss in patching cords and repeating coils.

23. Line Loss Measurements on 135-ohm Lines

One of the uses of Transmission Measuring Set TS–569/FT is measuring the line loss between stations, using a transmission measuring set at each end of the line. The test is made by transmitting test power at a certain level from one station, measuring the received power at the receiving station, and measuring the gain of any amplifiers in the circuit. For making these tests, refer to figure 12 and the following procedure:

a. Sending Station Procedure.

(1) Set the ATTENUATORS (E–2, E–3) for a loss equal to the desired sending power.

(2) Patch the LOSS IN jacks (J–11, J–12) to the 135-ohm line of the circuit under test. Use rubber-covered shielded pairs for 135-ohm circuits.

(3) Patch the source of test current to the POTENTIOMETER IN jacks (J–1, J–2).

(4) Set the ADJUST-COMPARE key (S–3) to the ADJUST position.

(5) With the three METER PROTECTION PADS (S–4) in the OUT position, regulate the oscillator output control and the TEST CURRENT POTENTIOMETER (R–1) to obtain a 0-db reading on the meter scale.

(6) Set the ADJUST-COMPARE key (S–3) to the COMPARE position to transmit the test power to the crcuit under test.

b. Receiving Station Procedure.

(1) Set the ATTENUATORS (E–2, E–3) for maximum loss.

(2) Patch the ATTENUATOR IN jacks (J–9, J–10) to the 135-ohm line of the circuit under test.

Note. Ordinarily, there is an amplifier in the line at the receiving station. This amplifier normally is adjusted to provide the same power as that of the sending station.

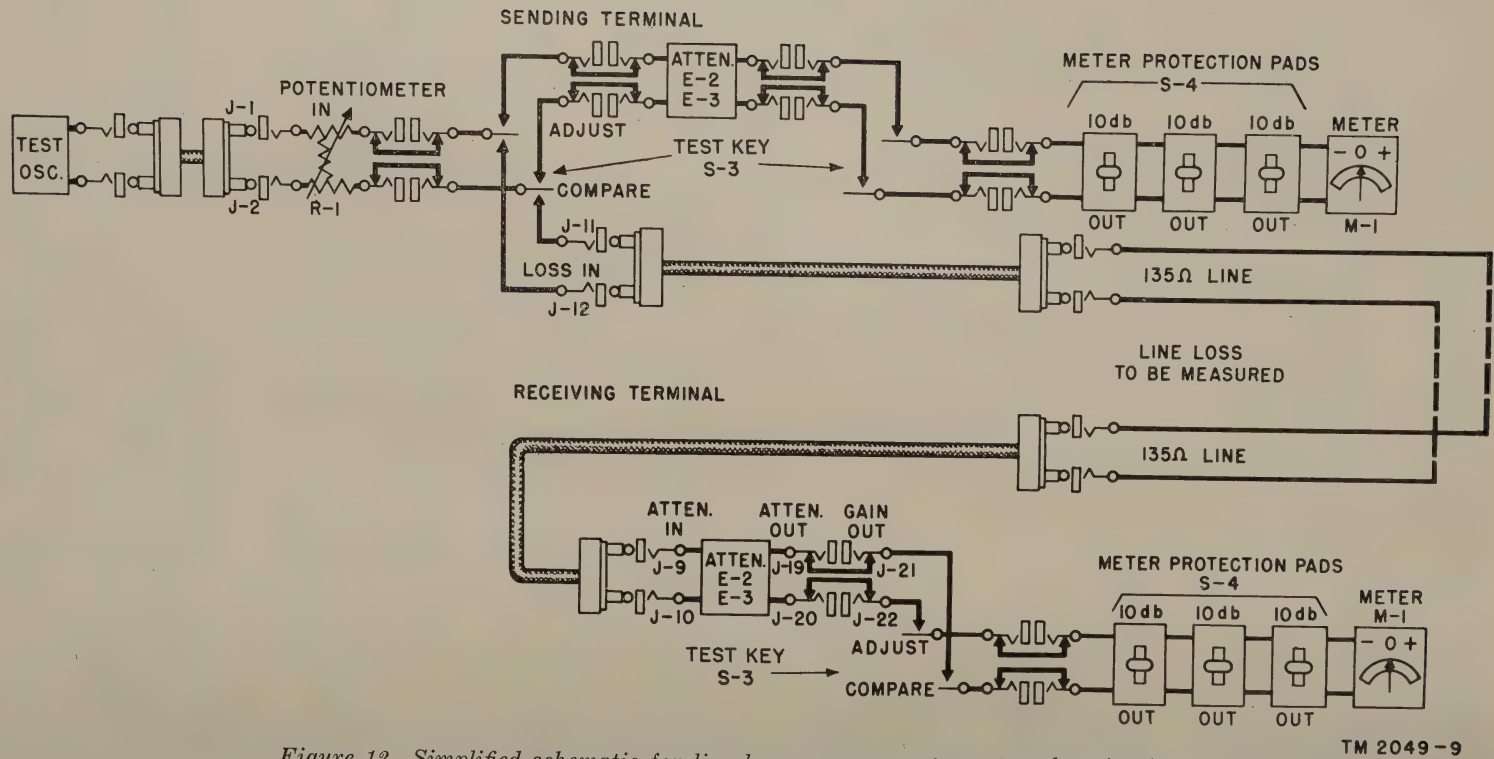

Figure 12. Simplified schematic for line loss measurements on 135-ohm circuits.

(3) Set the ADJUST-COMPARE key (S–3) to the ADJUST position and adjust the ATTENUATORS (E–2, E–3) to obtain a meter reading as close to 0 db as possible.

(4) The difference between the setting of the attenuators at the sending station, and the setting of the attenuators plus or minus the meter reading at the receiving station is the net loss or gain of the line. It is a loss if the setting of the attenuators at the receiving station is smaller than the setting at the sending station, and a gain if the setting at the receiving station is greater than the setting at the sending station. The attenuation of the line can be determined by adding the net loss to, or subtracting the net gain from, the gain of any amplifiers in the line. The measured loss should be reduced by the amount of loss in the patching cords used. Refer to paragraph 30 for the procedure for determining losses in patching cords.

24. Line Loss Measurements on 600-ohm Circuits

For line loss measurements on 600-ohm circuits, refer to figure 13, and the following procedure:

a. Sending Station Procedure.

(1) Set the ATTENUATORS (E–2, E–3) for a loss equal to the desired sending power.

(2) Patch the LOSS IN jacks (J–11, J–12) to the 135-ohm side of repeating coil (L–1) (J–27, J–28).

(3) Patch the 600-ohm side of repeating coil (L–1) (J–29, J–30) to the 600-ohm line of the circuit under test.

Note. Use spaced wires for 600-ohm circuits carrying the high frequencies of J-type carrier systems.

(4) Patch the source of test current to the POTENTIOMETER IN jacks (J–1, J–2).

(5) Set the ADJUST-COMPARE key (S–3) to the ADJUST position.

(6) With the three METER PROTECTION PADS (S–4) in the OUT position, regulate the oscillator output control and the TEST CURRENT POTENTIOMETER (R–1) to obtain a 0-db reading on the meter scale.

(7) Set the ADJUST-COMPARE key (S–3) to the COMPARE position to transmit the test power to the circuit under test.

b. Receiving Station Procedure.

(1) Set the ATTENUATORS (E–2, E–3) for maximum loss.

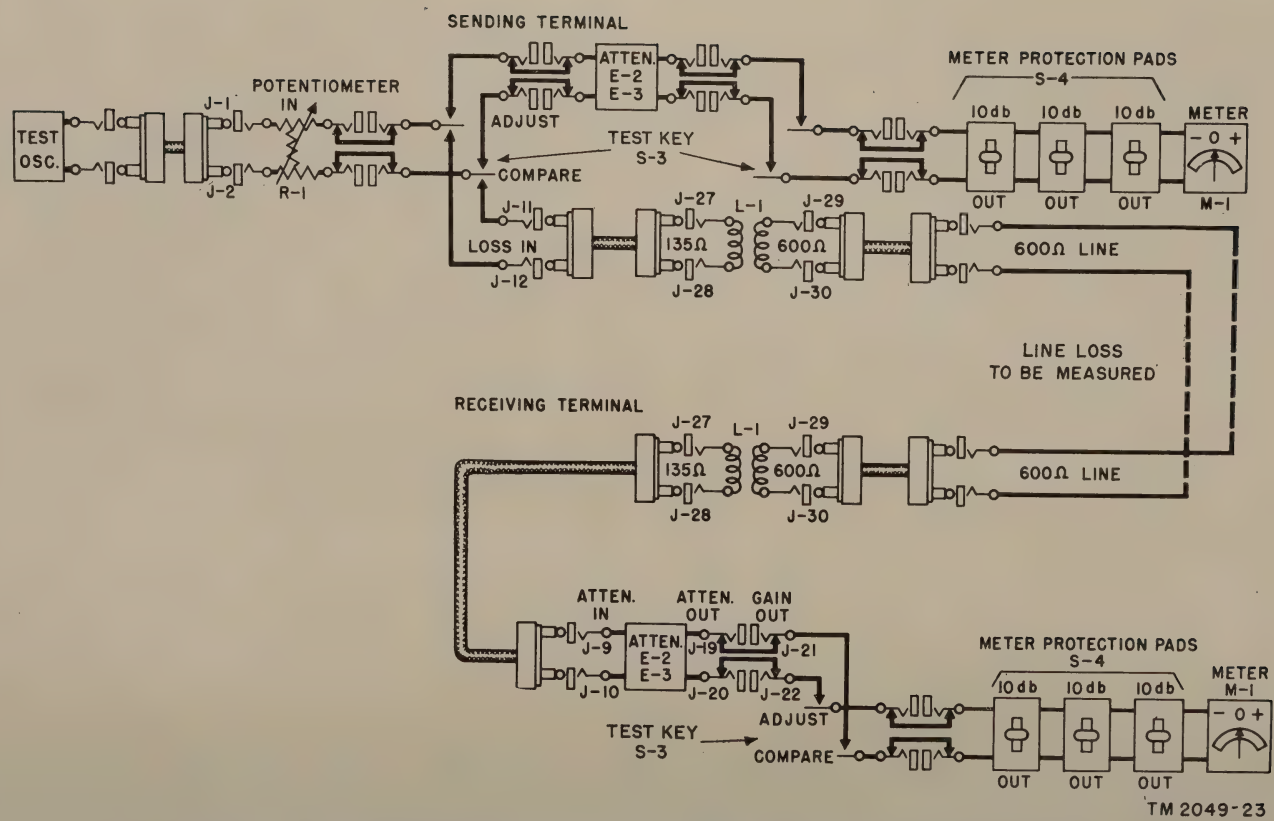

Figure 13. Simplified schematic for line loss measurements on 600-ohm circuits.

(2) Patch the ATTENUATOR IN jacks (J–9, J–10) to the 135-ohm side of repeating coil (L–1) (J–27, J–28).

(3) Patch the 600-ohm side of repeating coil (L–1) (J–29, J–30) to the 600-ohm line of the circuit under test.

Note. Ordinarily, there is an amplifier in the line at the receiving station. This amplifier normally is adjusted to provide the same power as that of the sending station.

(4) Set the ADJUST-COMPARE key (S–3) to the ADJUST position, and adjust the ATTENUATORS (E–2, E–3) to obtain a meter reading as close to 0 db as possible.

(5) The difference between the setting of the attenuators at the sending station, and the setting of the attenuators plus or minus the meter reading at the receiving station is the net loss or gain of the line. It is a loss if the setting of the attenuators at the receiving station is smaller than the setting at the sending station, and a gain if the setting at the receiving station is greater than the setting at the sending station. The attenuation of the line can be determined by adding the net loss to, or subtracting the net gain from, the gain of any amplifiers in the line. The measured loss should be reduced by the amount of loss in the patching cords and repeating coils used. Refer to paragraph 30 for the procedure for determining losses in patching cords and repeating coils.

25. Loss Measurements Less Than 10 db on 135-ohm Circuits (no Amplifier)

This method of test is limited by the ability of the oscillator to supply the power used at the input of the circuit under test. For loss measurements without an amplifier, refer to figure 14 and the following procedure:

Caution: Do not use this test on circuits containing crystal filters unless specified in the particular test method on the equipment involved.

a. Set the oscillator output for approximately 1 mw (0 dbm) and patch the oscillator to the POTENTIOMETER IN jacks (J–1, J–2).

b. Patch the LOSS IN jacks (J–11, J–12) to the input of the 135-ohm circuit under test.

c. Patch the output of the circuit under test to the LOSS OUT jacks (J–17, J–18).

d. Set the ADJUST-COMPARE key (S–3) to the COMPARE position.

e. Remove the three METER PROTECTION PADS (S–4) one at a time; do not remove the three pads all at one time as this may damage the thermocouple.

f. Increase the oscillator output slowly to obtain a meter reading of 0 db.

g. Set the ATTENUATORS (E–2, E–3) for 30 db, and set the ADJUST-COMPARE key (S–3) to the ADJUST position.

h. Change the setting of the ATTENUATORS (E–2, E–3) as required to obtain a meter reading of 0 db + or — 0.5 db with all METER PROTECTION PADS (S–4) in the OUT position.

i. The loss in the circuit under test is equal to the setting of the attenuators plus or minus the meter reading.

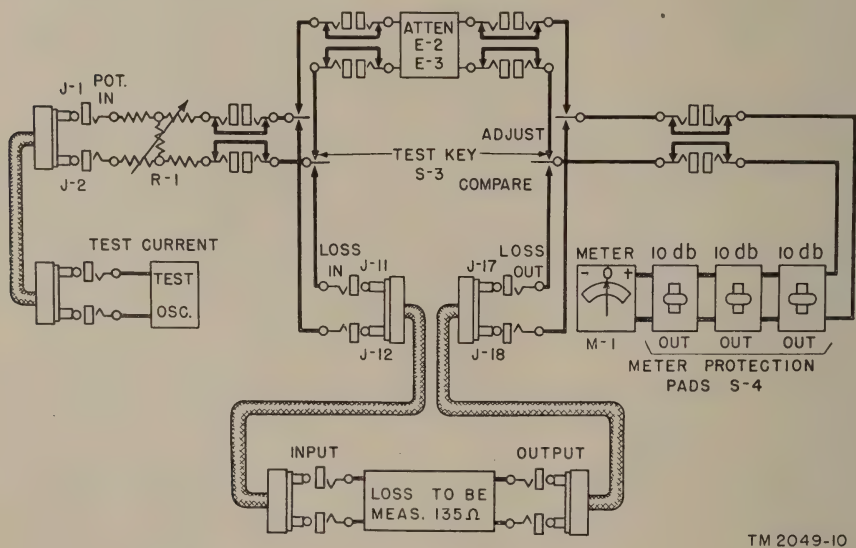

Figure 14. Simplified schematic for loss measurements less than 10 db on 135-ohm circuits.

26. Loss Measurements Less Than 10 db on 600-ohm Circuits (no Amplifier)

This method of test is limited by the ability of the oscillator to supply the power used at the input of the circuit under test. For loss measurements without an amplifier, refer to figure 15 and the following procedure:

Caution: Do not use this test on circuits containing crystal filters unless specified in the partciular test method on the equipment involved.

a. Set the oscillator output for approximately 1 mw (0 dbm) and patch the oscillator to the POTENTIOMETER IN jacks (J–1, J–2).

b. Patch the LOSS IN jacks (J–11, J–12) to the 135-ohm side of repeating coil (L–2) (J–13, J–14).

c. Patch the 600-ohm side of repeating coil (L–2) (J–15, J–16) to the input of the 600-ohm circuit under test.

d. Patch the output of the circuit under test to the 600-ohm side of repeating coil (L–1) (J–29, J–30).

e. Patch the 135-ohm side of repeating coil (L–1) (J–27, J–28) to the LOSS OUT jacks (J–17, J–18).

f. Set the ADJUST-COMPARE key (S–3) to the COMPARE position.

g. Remove the three METER PROTECTION PADS (S–4) one at a time; do not remove the three pads all at one time, this may damage the thermocouple.

h. Increase the oscillator output slowly to obtain a meter reading of 0 db.

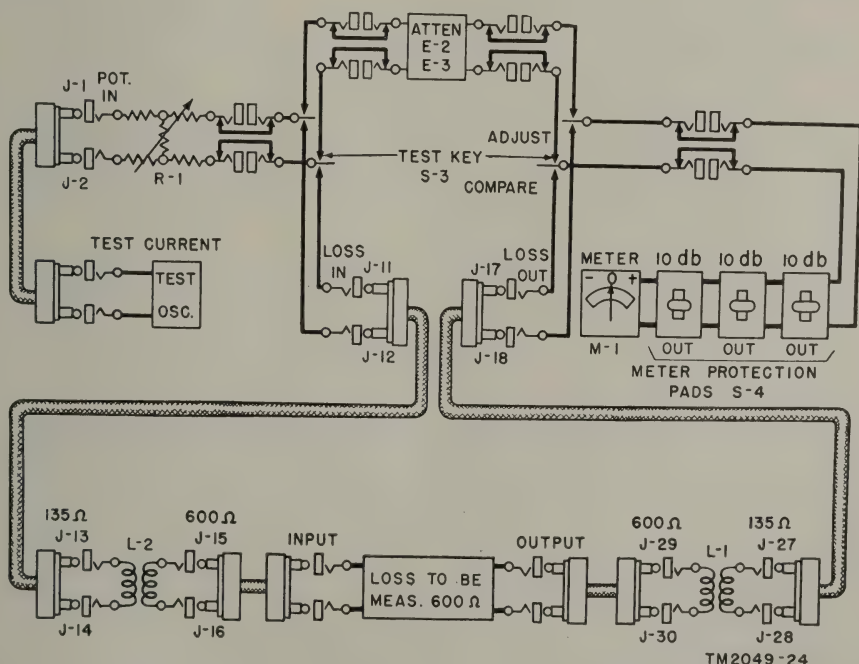

Figure 15. Simplified schematic for loss measurements less than 10 db on 600-ohm circuits.

i. Set the ATTENUATORS (E–2, E–3) for 30 db, and set the ADJUST-COMPARE key (S–3) to the ADJUST position.

j. Change the setting of the ATTENUATORS (E–2, E–3) as required to obtain a meter reading of 0 db + or — 0.5 db with all METER PROTECTION PADS (S–4) in the OUT position.

k. The loss in the circuit under test is equal to the setting of the attenuators plus or minus the meter reading. This loss should be reduced by the amount of loss in the repeating coils used. Refer to paragraph 30 for the procedure for determining losses in repeating coils.

27. Loss Measurements Exceeding 10 db on 135-ohm Circuits (with Amplifier)

Add a supplementary amplifier when making tests where the loss to be measured is greater than 10 db. For these tests, refer to figure 16 and the following procedure:

a. Set the ATTENUATORS (E–2, E–3) for maximum loss, and the oscillator for minimum output.

b. Patch the source of test current to the POTENTIOMETER IN jacks (J–1, J–2).

c. Patch the POTENTIOMETER OUT jacks (J–3, J–4) to the ATTENUATOR IN jacks (J–9, J–10).

d. Patch the ATTENUATOR OUT jacks (J–19, J–20) to the TEST KEY IN jacks (J–5, J–6).

e. Patch the ADJUST CURRENT OUT jacks (J–7, J–8) to the GAIN OUT jacks (J–21, J–22).

f. Patch the TEST KEY OUT jacks (J–23, J–24) to the input of the 135-ohm amplifier.

g. Patch the output of the amplifier to the 135-ohm T. C. jacks (J–25, J–26).

h. Patch the input of the 135-ohm circuit under test to the LOSS IN jacks (J–11, J–12) and patch the output of the circuit under test to the LOSS OUT jacks (J–17, J–18).

i. Set the ADJUST-COMPARE key (S–3) to the ADJUST position.

j. With the METER PROTECTION PADS (S–4) in the OUT position, reduce the setting of the ATTENUATORS (E–2, E–3) to approximately the nominal gain of the amplifier at the test frequency.

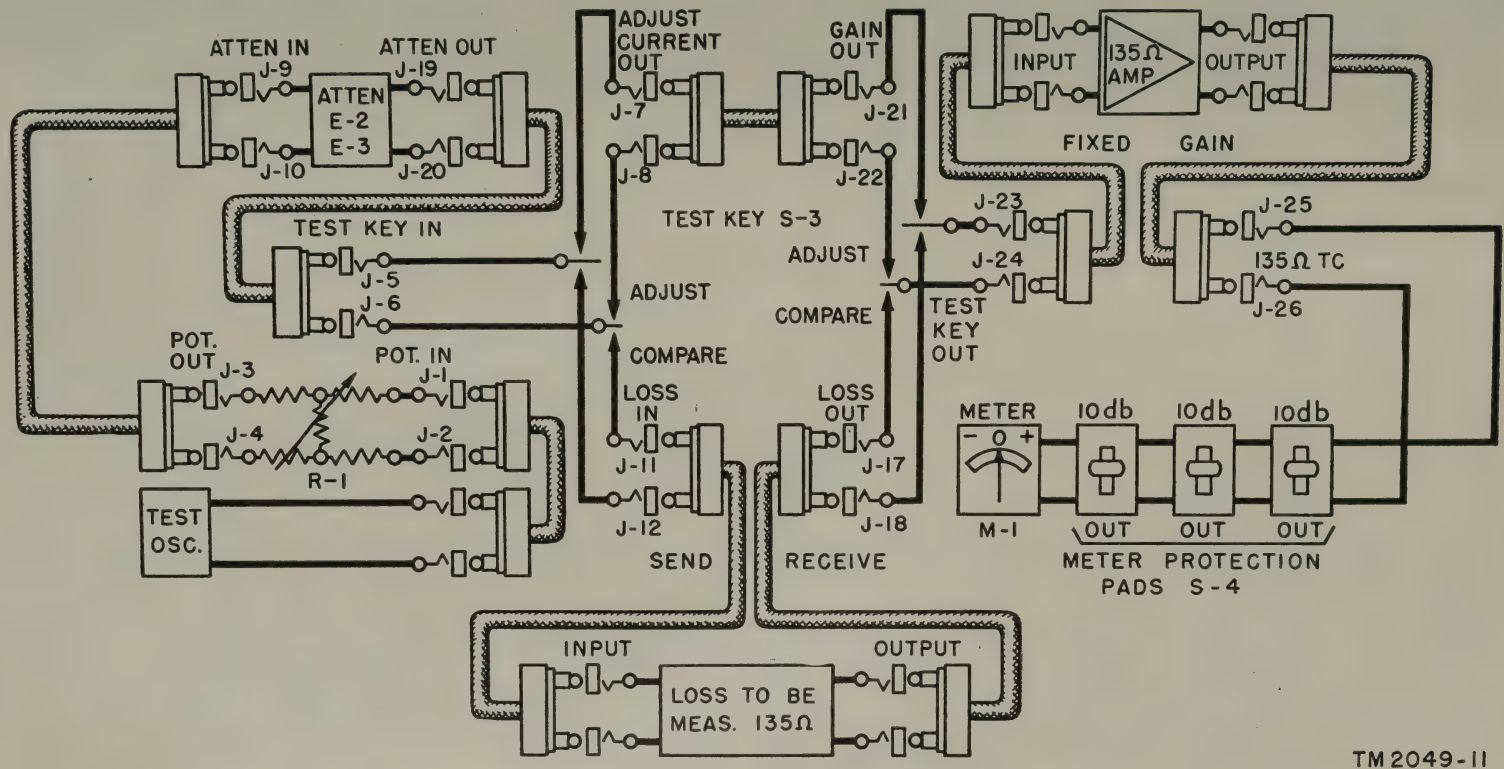

Figure 16. Simplified schematic for loss measurements exceeding 10 db on 135-ohm circuits.

k. Increase the oscillator output slowly, and adjust the TEST CURRENT POTENTIOMETER (R–1) to obtain a 0-db reading on the meter scale.

l. Note the setting of the ATTENUATORS (E–2, E–3) at this point.

m. Set the ADJUST-COMPARE key (S–3) to the COMPARE position, and decrease the setting of the ATTENUATORS (E–2, E–3) to obtain a 0-db reading + or —0.5 db on the meter scale with all METER PROTECTION PADS (S–4) in the OUT position.

n. The measured loss is the change in the attenuator loss setting plus or minus the meter reading.

28. Loss Measurements Exceeding 10 db on 600-ohm Circuits (with Amplifier)

Add a supplementary amplifier when making tests where the loss to be measured is greater than 10 db. For these tests, refer to figure 17 and the following procedure:

a. Set the ATTENUATORS (E–2, E–3) for maximum loss, and the oscillator for minimum output.

b. Patch the source of test current to the POTENTIOMETER IN jacks (J–1, J–2).

c. Patch the POTENTIOMETER OUT jacks (J–3, J–4) to the ATTENUATOR IN jacks (J–9, J–10).

d. Patch the ATTENUATOR OUT jacks (J–19, J–20) to the TEST KEY IN jacks (J–5, J–6).

e. Patch the ADJUST CURRENT OUT jacks (J–7, J–8) to the GAIN OUT jacks (J–21, J–22).

f. Patch the TEST KEY OUT jacks (J–23, J–24) to the input of the 135-ohm amplifier.

g. Patch the output of the amplifier to the 135-ohm T. C. jacks (J–25, J–26).

h. Patch the LOSS IN jacks (J–11, J–12) to the 135-ohm side of repeating coil (L–2) (J–13, J–14).

i. Patch the 600-ohm side of repeating coil (L–2) (J–15, J–16) to the input of the 600-ohm circuit under test.

j. Patch the output of the circuit under test to the 600-ohm side of repeating coil (L–1) (J–29, J–30).

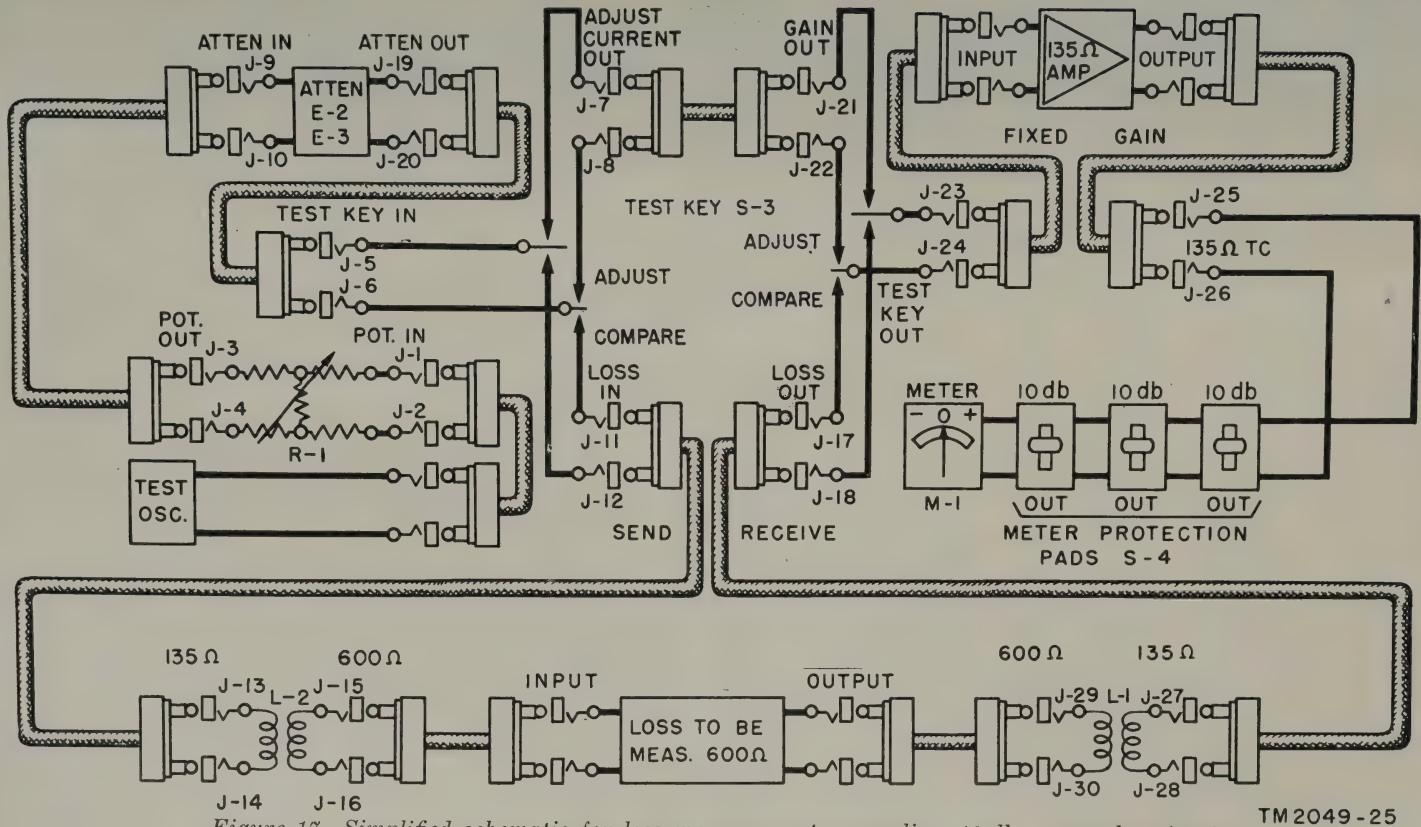

Figure 17. Simplified schematic for loss measurements exceeding 10 db on 600-ohm circuits.

k. Patch the 135-ohm side of repeating coil (L–1) (J–27, J–28) to the LOSS OUT jacks (J–17, J–18).

l. Set the ADJUST-COMPARE key (S–3) to the ADJUST position.

m. With the METER PROTECTION PADS (S–4) in the OUT position, reduce the setting of the ATTENUATORS (E–2, E–3) to approximately the nominal gain of the amplifier at the test frequency.

n. Increase the oscillator output slowly, and adjust the TEST CURRENT POTENTIOMETER (R–1) to obtain a 0-db reading on the meter scale.

o. Note the setting of the ATTENUATORS (E–2, E–3) at this point.

p. Set the ADJUST-COMPARE key (S–3) to the COMPARE position, and decrease the setting of the ATTENUATORS (E–2, E–3) to obtain a 0-db reading + or —0.5 db on the meter scale with all METER PROTECTION PADS (S–4) in the OUT position.

q. The measured loss is the change in the attenuator loss setting plus or minus the meter reading. This loss should be reduced by the amount of loss in the repeating coils. Refer to paragraph 30 to determine this loss.

29. Loss Measurements on 600-ohm Circuits Using a 600-ohm Amplifier

For loss measurements on 600-ohm circuits using a 600-ohm amplifier, refer to figure 18 and the following procedure:

a. Set the ATTENUATORS (E–2, E–3) for maximum loss, and the oscillator for minimum output.

b. Patch the source of test current to the POTENTIOMETER IN jacks (J–1, J–2).

c. Patch from the ATTENUATOR OUT jacks (J–19, J–20) to the 135-ohm side of repeating coil (L–2) (J–13, J–14).

d. Patch the 600-ohm side of repeating coil (L–2) (J–15, J–16) to the MULTIPLE jacks.

e. Patch the MULTIPLE jacks to the input of the 600-ohm amplifier.

f. Patch the output of the 600-ohm amplifier to the 600-ohm side of repeating coil (L–1) (J–29, J–30).

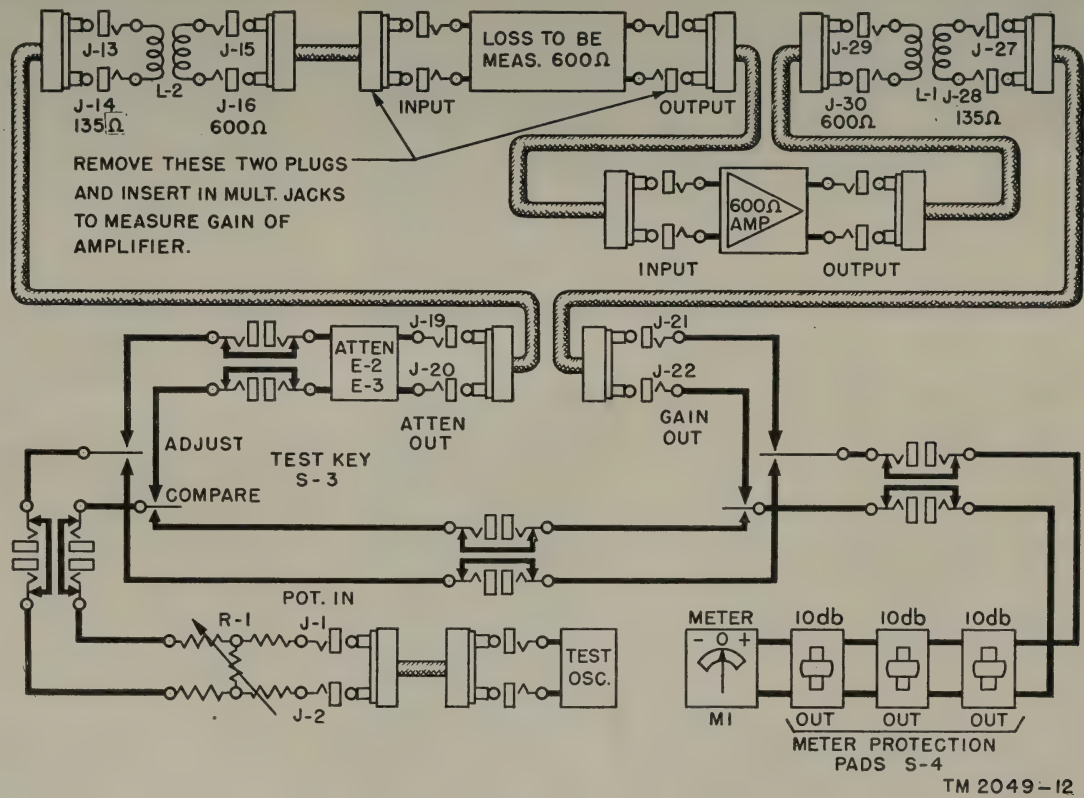

Figure 18. Simplified schematic for loss measurements on 600-ohm circuits using a 600-ohm amplifier.

g. Patch the 135-ohm side of repeating coil (L–1) (J–27, J–28) to the GAIN OUT jacks (J–21, J–22).

h. Set the ADJUST-COMPARE key (S–3) to the ADJUST position.

i. With all METER PROTECTION PADS (S–4) in the OUT position, reduce the setting of the ATTENUATORS (E–2, E–3) to approximately the nominal gain of the amplifier at the test frequency.

j. Increase the oscillator output slowly and adjust the TEST CURRENT POTENTIOMETER (R–1) to obtain a 0-db reading on the meter scale.

k. Note the setting of the ATTENUATORS (E–2), (E–3) at this point.

l. Remove the MULTIPLE patching.

m. Patch the 600-ohm side of repeating coil (L–2) (J–15, J–16) to the input of the 600-ohm circuit under test.

n. Patch the output of the circuit under test to the input of the 600-ohm amplifier.

o. With the ADJUST-COMPARE key (S–3) in the ADJUST position, and all METER PROTECTION PADS (S–4) in the OUT position, reduce the ATTENUATORS (E–2), (E–3) to obtain a 0-db reading + or —0.5 db on the meter scale.

p. The measured loss is the change in the attenuator loss setting plus or minus the meter reading. This loss should be reduced by the amount of loss in the repeating coils. Refer to paragraph 30 to determine this loss.

30. Measuring Losses in Coils, Patching Cords, and Lines

a. Loss in repeating coils and patching cords is determined by patching from the LOSS IN jacks (J–11, J–12) (fig. 19) to the 135-ohm side of the coil, and from the MULTIPLE jacks to the 600-ohm side of the coil. Patch from the MULTIPLE jacks to the 600-ohm side of the other coil, and from the 135-ohm side of this coil to the LOSS OUT jacks (J–17, J–18). Measure the loss. Assume the loss of one coil and its two cords to be half the total loss.

Note. When measuring the above loss, use the same frequency as that in making the test.

b. Loss in patching cords generally will be found negligible when measuring 135-ohm impedances. The identical cords, when used in measuring 600-ohm impedances, will have appreciable loss.

c. When measuring unbalanced 135-ohm circuits (circuits having one side grounded), it usually is necessary to have shielded coils ahead of the input of the circuit under test. The two repeating coils (L–1, L–2) (fig. 19) may be used by patching the two 600-ohm sides of the coils together. This provides a 1 to 1 coil arrangement at 135 to 135 ohms. If the patching arrangement is such that the repeating coil is inserted between the POTENTIOMETER OUT jacks (J–3, J–4) (fig. 19) and the TEST KEY IN jacks (J–5, J–6), the loss of the repeating coils may be disregarded, since they are in the circuit for both positions of the test key.

d. When measuring unbalanced 600-ohm circuits, patch one of the coils to the input of the circuit under test, and the other to the measuring set. This furnishes the electrical separation required and also provides impedance matching. When the repeating coils are used on either side of the comparison circuit, subtract the loss of the coils when making loss measurements, and add their loss when making gain measurements, unless the coil has been included in the limits.

31. Calibration of Meter Scale

The meter scale is accurate within 0.1 db between the + 1.0-db and —1.0-db divisions of the scale. Ordinarily it is used within this + or —1.0-db range. Outside this range, the accuracy may vary because of variations in different thermocouples. If accurate measurements are required, using points on the meter outside the + or —1.0-db range, check the accuracy of points on the scale with a selected thermocouple as follows:

a. Calibrate Transmission Measuring Set TS–569/FT using the normal calibration steps given in paragraph 14.

b. Patch the source of test current to the POTENTIOMETER IN jacks (J–1, J–2).

c. Set the oscillator at 1 kc (kilocycle) or other convenient frequency and the output for 135 ohms.

d. Set the ATTENUATOR (E–3) for a loss of 3 db.

e. Set the ADJUST-COMPARE KEY (S–3) to the ADJUST position.

f. Adjust the oscillator output and the TEST CURRENT POTENTIOMETER (R–1) to obtain a 0-db reading on the meter scale with all three METER PROTECTION PADS (S–4) in the OUT position.

g. Increase the attenuator setting to 10-db and note the meter reading. The departure from the —7-db mark indicates the combined error of the thermocouple and the meter at this point.

h. Reset the ATTENUATOR (E–3) to 3 db and readjust the TEST CURRENT POTENTIOMETER (R–1) to obtain a 0-db reading if necessary.

i. Set the attenuator for a 0-db loss and note the meter reading. The departure from the + 3-db mark indicates the combined error of the thermocouple and the meter at this point. If the errors are greater than are permitted for the type of tests involved, replace the thermocouple and repeat this test.

j. To make a complete calibration of the meter scale, vary the ATTENUATOR (E–3) in steps of 1 db and record the true db-readings for subsequent reference. These deviations are practically independent of frequency within the 150-kc range of the transmission measuring set and will remain constant for the same thermocouple unless subjected to an overload. If the thermocouple has been overloaded (6 db above 1 mw or more), recheck this calibration.

32. Purpose and Use of Equipment Performance Checklist

a. General. The equipment performance checklist (par. 33) aids in determining whether the measuring set is functioning properly. This checklist gives the item to be checked, the action or condition under which it is checked, the normal indications of correct operation (what should happen), and the corrective measures (what to do) the operator may take.

b. Action or Condition. For some items the information given in the action or condition column consists of settings of various keys and controls under which the items are checked. For other items it represents an action that must be taken to check the normal indication given in the normal indication column.

c. What Should Happen. The normal indications listed include the visible signs that the operator will find when he checks the items. Apply the recommended corrective measures if the indications are not normal.

d. What To Do. When normal indications are not present, the operator may perform the corrective measures listed without turning in the transmission measuring set for repairs. If the set is completely inoperative or if the recommended corrective measures do not yield results, turn the equipment over to the maintenance unit as soon as possible.

33. Equipment Performance Checklist

	Item No.	Item	Action or condition	What should happen	What to do
PREPARATORY	1	BATTERY	BATTERY key (S–5) held down; calibrate-measure switch (S–1) in any of the four calibration positions.	Meter pointer shows battery current flow.	Weak or defective battery; replace.
	2	Thermocouple	During calibration or while making measurements.	Meter registers proper readings.	Thermocouple may be damaged; replace.
START	3	DIAL 1, DIAL 2, DIAL 3 potentiometers.	Operate calibrate-measure switch to corresponding positions.	Meter pointer can be adjusted to read 0 db for each position of the calibrate-measure switch by means of the DIAL 1, DIAL 2, and DIAL 3 potentiometers.	*Defective potentiometers; replace.
	4	Calibrate-measure switch	Operate switch for calibration or for making measurements.	Meter registers proper readings for each operation.	Defective thermocouple; replace.
EQUIP. PERF.	5	TEST CURRENT POTENTIOMETER.	Regulate incoming signal	TEST CURRENT POTENTIOMETER adjust signal.	*Open or shorted test current potentiometer; repair or replace.
	6	ATTENUATORS	Increase or decrease attenuator settings.	Meter pointer registers corresponding change.	*Defective attenuators; repair or replace.
STOP	7	Meter damping key	Hold key down	Meter shorts out	*Defective key; repair or replace.

*These operations should be performed by authorized maintenance personnel.

34. Operation Under Unusual Conditions

If Transmission Measuring Set TS–569/FT is required to perform tests under severe climatic conditions which prevail in tropical, arctic, or desert regions, or where excessive moisture, dirt, dust, or sand is present, the same precautions that apply to the equipment under test will apply to the transmission measuring set. This information can be obtained from the manual covering the equipment under test, which gives the procedure for selecting the correct site, tells how the equipment should be housed, and gives methods of dustproofing, moistureproofing, ventilating, etc. For data on applying special preservatives to the measuring set, refer to paragraph 36.

CHAPTER 3

MAINTENANCE INSTRUCTIONS

Section I. LUBRICANTS AND PRESERVATIVES

35. Lubricants

Lubrication is not required for Transmission Measuring Set TS–569/FT.

36. Weatherproofing

a. GENERAL. Signal Corps equipment, when operated under severe climatic conditions such as prevail in tropical, arctic, and desert regions, requires special treatment and maintenance. Fungus growth, insects, dust, corrosion, salt spray, excessive moisture, and extreme temperatures are harmful to most materials.

b. TROPICAL MAINTENANCE. A special moistureproofing and fungiproofing treatment has been devised which, if properly applied, provides a reasonable degree of protection. This treatment is fully explained in TB SIG 13, Moistureproofing and Fungiproofing Signal Corps Equipment, and TB SIG 72, Tropical Maintenance of Ground Signal Equipment.

c. WINTER MAINTENANCE. Special precautions necessary to prevent poor performance or total operational failure of equipment in extremely low temperatures are fully explained in TB SIG 66, Winter Maintenance of Signal Equipment.

d. DESERT MAINTENANCE. Special precautions necessary to prevent equipment failure in areas subject to extremely high temperatures, low humidity, and excessive sand and dust are fully explained in TB SIG 75, Desert Maintenance of Ground Signal Equipment.

e. LUBRICATION. The effects of extreme cold and heat on materials and lubricants are explained in TB SIG 69, Lubrication of Ground Signal Equipment. Observe all precautions outlined in TB SIG 69 and pay strict attention to all lubrication orders when operating equipment under conditions of extreme cold or heat.

37. Rustproofing and Painting

a. When the finish on the case has been badly scarred or damaged, rust and corrosion can be prevented by touching up

bared surfaces. Use sandpaper #00 or #000 to clean the surface down to the bare metal. Obtain a bright, smooth finish.

Caution: Do not use steel wool. Minute particles frequently enter the case and cause harmful internal shorting or grounding of circuits.

b. When a touch-up job is necessary, apply paint with a small brush. When numerous scars and scratches warrant complete repainting, remove the transmission set chassis and spray paint over the entire case. Remove rust from the case by cleaning corroded metal with Solvent, dry-cleaning (SD). In severe cases it may be necessary to use solvent (SD) to soften the rust, and sandpaper to complete the preparation for painting. Paint used will be authorized and consistent with existing regulations.

Section II. PREVENTIVE MAINTENANCE SERVICES

38. Definition and Importance of Preventive Maintenance

a. DEFINITION. PM (preventive maintenance) is intended to keep equipment in good condition so that break-downs and delays in service will be kept to a minimum. PM differs from trouble shooting and repair since its object is to eliminate the need for repair and correction of faults by trouble shooting and repair.

b. IMPORTANCE. Failure of Transmission Measuring Set TS–569/FT may result in inefficient operation of the telephone and telegraph carrier equipment. Therefore, operators must maintain equipment placed in their charge in such condition that it performs efficiently at all times.

39. Preventive Maintenance Tools and Materials

Before starting PM procedures, have on hand all tools and materials needed in performing the operations listed in the PM checklist (par. 41). These tools and materials may be secured through regular supply channels.

a. TOOLS.

Signal Corps stock No.	Item
6Z1428	BRUSH: bristle; soft.
6Z1415–1	BRUSH: bristle; stiff.
6R40165C	BURNISHER: contact (WECo No. 265–C).
6R4740–5	PLIERS: parallel jaw (WECo No. KS–7782).
6Z3760	STICK: orange (WECo No. KS–6320).
6R41274A	WRENCH: double offset (WECo No. 474–A).

b. MATERIALS.

Signal Corps or Quartermaster stock No.	Item
6G184.1	CARBON TETRACHLORIDE.
8A805	CHEESECLOTH: bleached, lint-free.
6G1385	OIL: neat's-foot (p/o Tool Set TE–56).
6G1516	POLISH: metal paste.
6Z7500–0000	PAPER: sand #0000; 9″ x 11″ sheets.
Q.M.51–S–1324	SOAP: alkali free.
Q.M.51–S–1775	SOAP: saddle.
Q.M.51–S–4381–1	SOLVENT: dry-cleaning (SD).
6Z8666	TOOTHPICKS: hardwood.

Note. Gasoline will not be used as a cleaning fluid.

40. Purpose and Use of Preventive Maintenance Checklist

The following checklist is a summary of preventive maintenance services that should be performed on Transmission Measuring Set TS–569/FT. By referring to the list the reader will learn what to check, when to check, how to check, and what precautions to take before, during, and after checking the equipment.

41. Preventive Maintenance Checklist

Item No.	What to check	When to check	How to check	Precautions
1	Measuring set exterior and panel.	D	Inspect for damage, chipped paint, dirt, dust, rust, corrosion, loose, or missing screws. Wipe with clean cloth slightly moistened with solvent (SD) to remove oil, grease, or foreign matter. Wipe with dry cloth.	Tighten screws snugly. Never force them.
2	Jacks	W	Remove measuring set from case by taking out the four mounting bolts in the case (two on each side). Inspect the jacks for dirt, dust, and other foreign matter. Be sure jacks are tightly fastened. Clean with solvent (SD) and a clean dry cloth.	Do not tighten jack screws more than necessary. Never force them.

Item No.	What to check	When to check	How to check	Precautions
3	Battery and battery case.	W	Remove battery cover and inspect battery for corrosion. Be sure battery is not swelling. Check spring in bottom of battery case for proper tension. See that contacts on battery and cover cap are clean; and that there is proper contact between the battery and the cap.	
4	Thermocouple	W	Remove thermocouple from socket and inspect socket for corrosion. Check prong contacts of thermocouple.	Be certain there is enough tension to afford good contact with the prongs of the thermocouple.
5	Controls	D	Inspect for freedom of action. See that only a normal amount of pressure is required to operate them. Be certain knobs are not loose.	Do not overtighten screws holding knobs.
6	Interior	M	Inspect wiring and other parts for excessive wear. Check contacts of keys and switches for dirt, dust, or foreign matter. Look for corrosion and rust. See that all solder joints are secure. Check screws, nuts, and bolts. Tighten screw-type terminals. Blow dust or dirt from the interior with an air hose.	Do not overtighten screws, nuts, and bolts. If it is necessary to re-solder, be sure no loose solder falls between other parts; this causes shorts.
7	Patching cords and plugs.	W	Inspect cords for dirt, dust, mildew, and fungus growth. Inspect plugs for corrosion and loose connections. Clean cords with clean dry cloth, wiping off dirt, dust, and foreign matter. If grease is on cords, use solvent (SD). Tighten plug connections with screw driver.	Never use soap and water when cleaning cords and plugs. Never use gasoline or other inflammable materials. Use a screw driver of proper size.

D—Daily. W—Weekly. M—Monthly.

Section III. TROUBLE SHOOTING

42. Trouble Shooting Defined

Trouble shooting is intended to locate and correct (within limitations) faults occurring in the equipment which cause break-downs, interruptions in service, or which render it wholly inoperative.

43. Steps Involved in Trouble Shooting

a. TROUBLE-SHOOTING DATA. Several factors must be considered before proceeding with the actual location of trouble. A knowledge of the functioning of the equipment and theory of operation is necessary for properly applying the techniques of trouble shooting. Use the following trouble-shooting information supplied in this manual:

(1) Trouble-shooting chart (par. 45).
(2) Simplified schematic diagram of Transmission Measuring Set TS–569/FT (fig. 19).
(3) Over-all schematic diagram of Transmission Measuring Set TS–569/FT (fig. 24).
(4) Illustrations which aid in locating or identifying parts and controls.

b. TROUBLE-SHOOTING STEPS.

(1) Check the trouble report to determine the probable cause of trouble. When checking the report, refer to the over-all schematic diagram to localize the fault to a particular part.
(2) Inspect the equipment visually for damaged or broken wiring or defective parts. If the fault cannot be located by this method, trace the circuit by making continuity measurements.
(3) When locating the fault by elimination, start at a point where the circuit is known to have continuity, and proceed step by step until the fault is located.

44. Localizing Electrical Troubles

When localizing electrical troubles in Transmission Measuring Set TS–569/FT, do not disturb the wiring any more than is necessary in testing and inspecting. Most electrical troubles will be found in keys, switches, and jacks, or at any point where connections or contacts are made. Use a voltohmmeter for locating electrical troubles. Refer to the over-all schematic and simplified schematic diagrams and make point-to-point tests until the trouble is located.

45. Trouble-shooting Chart

Symptoms	Possible troubles	Corrections
Pointer drops off when calibrating	1. Battery low	1. Check and replace battery if voltage is low.
Set will not calibrate or make tests	1. Thermocouple damaged 2. Meter damaged	1. Replace thermocouple. 2. Check meter. Replace if damaged.
No indication when BATTERY key is pressed and calibrate-measure switch is set on one of the calibrate positions.	1. Open in calibration circuit 2. BATTERY key not making proper contact 3. Calibrate-measure switch making poor contact 4. Battery dead	1. Repair open. 2. Check BATTERY key and repair or replace. 3. Check calibrate-measure switch and repair or replace. 4. Replace battery.
Set will calibrate in DIAL 1 position only	1. Defective thermocouple	1. Replace thermocouple.
Meter pointer varies when adjusting DIAL 1, 2, or 3 during calibration.	1. DIAL 1, 2, or 3 potentiometer damaged	1. Replace defective dial potentiometer.
Set dead with switch in MEASURE position	1. Switch contacts worn 2. Open in jack circuit or wiring 3. Defective thermocouple 4. Open in patching cords or plugs	1. Replace switch. 2. Locate and repair open. 3. Replace thermocouple. 4. Repair or replace patching cords or plugs.
Cannot adjust incoming signal	1. TEST CURRENT POTENTIOMETER open or shorted. 2. Contacts worn on ADJUST-COMPARE key	1. Check potentiometer and repair or replace. 2. Check key and repair or replace.
No indication on meter or wrong reading on meter when METER PROTECTION PADS are removed from the circuit.	1. Open or short circuit 2. Poor contacts on METER PROTECTION PADS.	1. Locate and repair. 2. Repair or replace pads.

Meter pointer varies when making tests	1. Dirty jacks or plugs 2. Worn jacks or plugs 3. Intermittent short, poor connection in patching cords or plugs, or poor connection in circuit.	1. Clean jacks or plugs. 2. Repair or replace defective jacks or plugs. 3. Locate and repair.
Too much drop or increase when adjusting the ATTENTUATOR.	1. Open in attenuator circuit 2. Open in attenuator coils 3. Worn contacts, short in circuit or attenuator coils.	1. Repair open, or replace defective part. 2. Repair or replace coil. 3. Replace ATTENUATOR, or repair or replace defective parts.

CHAPTER 4

EQUIPMENT USED IN CONJUNCTION WITH TRANSMISSION MEASURING SET TS–569/FT

46. Oscillator TS–401/U

Oscillator TS–401/U is not supplied with Transmission Measuring Set TS–569/FT, but frequently is used with it for making tests. This oscillator is commercially known as WECo 51A Oscillator, and is a portable unit with all controls mounted on the front panel. For a complete description and detailed information on the operation, maintenance, and repair of this oscillator, refer to TM 11–2040.

47. Procedure for Connecting to Oscillator TS–401/U

a. Oscillator TS–401/U is used to supply power to the measuring set when making gain, loss, and line loss measurements.

b. After the desired frequency has been set on the oscillator, patch from the OSC OUT jacks of the oscillator to the appropriate jacks of the transmission measuring set by means of the patching cords.

Caution: Oscillator TS–401/U has an impedance of 135 ohms. When making measurements on 600-ohm circuits, use the impedance matching coils (repeating coils) of the transmission measuring set.

CHAPTER 5

FIELD AND BASE MAINTENANCE INSTRUCTIONS

Section I. CONDENSED THEORY OF OPERATION

48. General Functioning of Equipment

Transmission Measuring Set TS–569/FT was designed primarily for use at frequencies up to 150,000 cycles. With the attenuators in the set, it can be used to measure gains up to 90 db; and, with limitations, gains up to 120 db can be measured. The maximum loss than can be measured without a supplementary amplifier will depend on the maximum testing power that can be used at the input of the circuit under test. The impedance of the set is 135 ohms including attenuators, pads, and thermocouple circuit. Two coils having an impedance ratio of 600:135 ohms are included to permit measurements of 600-ohm circuits. Two comparison paths, which are controlled by a switching key, are provided between the input of the set and the thermocouple and meter. One path contains an adjustable attenuator and both paths contain suitable jacks for measuring losses, gains, and incoming power. A potentiometer is provided in the input to the set for accurately adjusting the testing power, and three key-conrolled pads are provided ahead of the meter and thermocouple for protection purposes.

49. Gain or Loss Measurements

In making gain or loss measurements at carrier frequencies, the signal produced by the oscillator is fed into the transmission measuring set through the jacks on the front panel, then through the TEST CURRENT POTENTIOMETER and ADJUST-COMPARE key. This key provides two paths for comparison tests. When the circuit to be measured has gain, that circuit is inserted in the adjust side of the comparison circuit in series with the ATTENUATORS (E–2, E–3). These attenuators then are adjusted so that the attenuation in the circuit balances out the amount of gain in the circuit under test. Accordingly, the setting of the attenuators is equal to the amount of gain in the circuit. When the circuit to be measured has loss, that circuit is inserted in the compare path of the comparison circuit. In this case, the attenuators which are on the adjust side are used as a basis for comparison with the circuit under test. The amount of attenuation

required to obtain a meter reading as close to 0 db as possible indicates the amount of loss in the circuit under test. Measurement of 600-ohm circuits require the use of the 135:600-ohm impedance matching coils.

50. Power Measurements

In making measurements of incoming power, the circuit under test is connected directly to the ATTENUATOR (E–2, E–3) by using the jacks on the front panel. The signal then is fed to the METER PROTECTION PADS through the thermocouple to the meter. The amount of power being measured is the total setting of the attenuator plus or minus the meter reading. Measurements may be made on 600-ohm circuits as well as 135-ohm circuits by adding one of the impedance matching coils between the circuit being tested and the ATTENUATOR IN jacks of the measuring set.

51. Line Loss Measurements

In making line loss measurements, two measuring sets are used. One acts as a sending station, with a testing signal produced by an oscillator. The other set acts as a receiving station. The line to be tested is connected to the LOSS IN jacks of the sending station and the ATTENUATOR IN jacks of the receiving station. A signal is sent from the oscillator to the POTENTIOMETER IN jacks and TEST CURRENT POTENTIOMETER of the sending station. The ADJUST-COMPARE key of the sending set is set in the ADJUST position and the signal then is sent through the attenuator, meter protection pads, thermocouple, and meter of the set. With the ADJUST-COMPARE key in this position, the sending station set may be adjusted prior to making a test. When the ADJUST-COMPARE key is switched to the COMPARE position, the signal is fed through the TEST CURRENT POTENTIOMETER of the sending station to the line under test and to the attenuator of the receiving station. The ADJUST-COMPARE key of the receiving station is set in the ADJUST position. This directs the signal to the METER PROTECTION PADS, thermocouple, and meter. The amount of loss being measured is the difference between the attenuator setting plus or minus the meter reading of the receiving station compared to the attenuator setting of the sending station. Measurements may be made on 600-ohm circuits as well as 135-ohm circuits by adding one of the repeating coils from each of the sets, and connecting the 600-ohm side of each coil to the line under test and the 135-ohm side to the appropriate jacks of the sending and receiving sets.

52. Function of Components of Transmission Measuring Set TS–569/FT

a. ATTENUATOR. The ATTENUATOR (E–2, E–3) is divided into two sections, each of which is marked off in db; one section is marked from 0 to 50 db in steps of 10 db, and the other section is marked from 0 to 10 db in steps of 1 db. The attenuator is made up of a number of separate resistors of a known value. These are interconnected, enabling the attenuation of the circuit to be increased or decreased as required to obtain a reading on the meter.

b. ADJUST-COMPARE KEY. This is a three-position key. The testing signal is connected to one pair of transfer contacts and the circuit under test is connected to the other pair of contacts. This allows a comparison to be made between the two circuits when the key is switched from one position to the other.

c. BATTERY. The battery used in the measuring set is 1½-volt dry cell (BA–30). It supplies current during the steps of calibration.

d. BATTERY KEY. This is a nonlocking push-button key. Its function is to bring the battery into the rest of the calibration circuit as shown in figures 16, 17, and 18.

e. CALIBRATE-MEASURE SWITCH. This switch is marked off in five positions, four of which are for calibration, the other being used when making tests with the measuring set.

f. 30-DB IN ATTENUATOR. This key is used when the attenuation in the circuit to be tested is expected to exceed 60 db. This key supplies a resistance to the circuit under test equal to 30 db when thrown to the IN ATTENUATOR position.

g. METER PROTECTION PADS. These are three pads, each having a resistance equal to 10 db. The pads are wired into the circuit just ahead of the theremocouple and provide protection against overload to the sensitive thermocouple and meter.

h. METER. The meter of the measuring set is a d-c milliammeter with a resistance of about 10 ohms which gives a full scale deflection at about 200 microamperes. The meter scale is calibrated in decibels referred to 1 mw and extends from —10 db to +3.4 db with a 0 db index near midscale. A reading on the meter, added to the setting of the attenuator, allows close measurement of circuits being tested.

i. THERMOCOUPLE. The thermocouple used in this set has a heater resistance between 80 and 100 ohms. The 50-ohm rheostat, designated DIAL 2, and a 20-ohm fixed resistance are in series

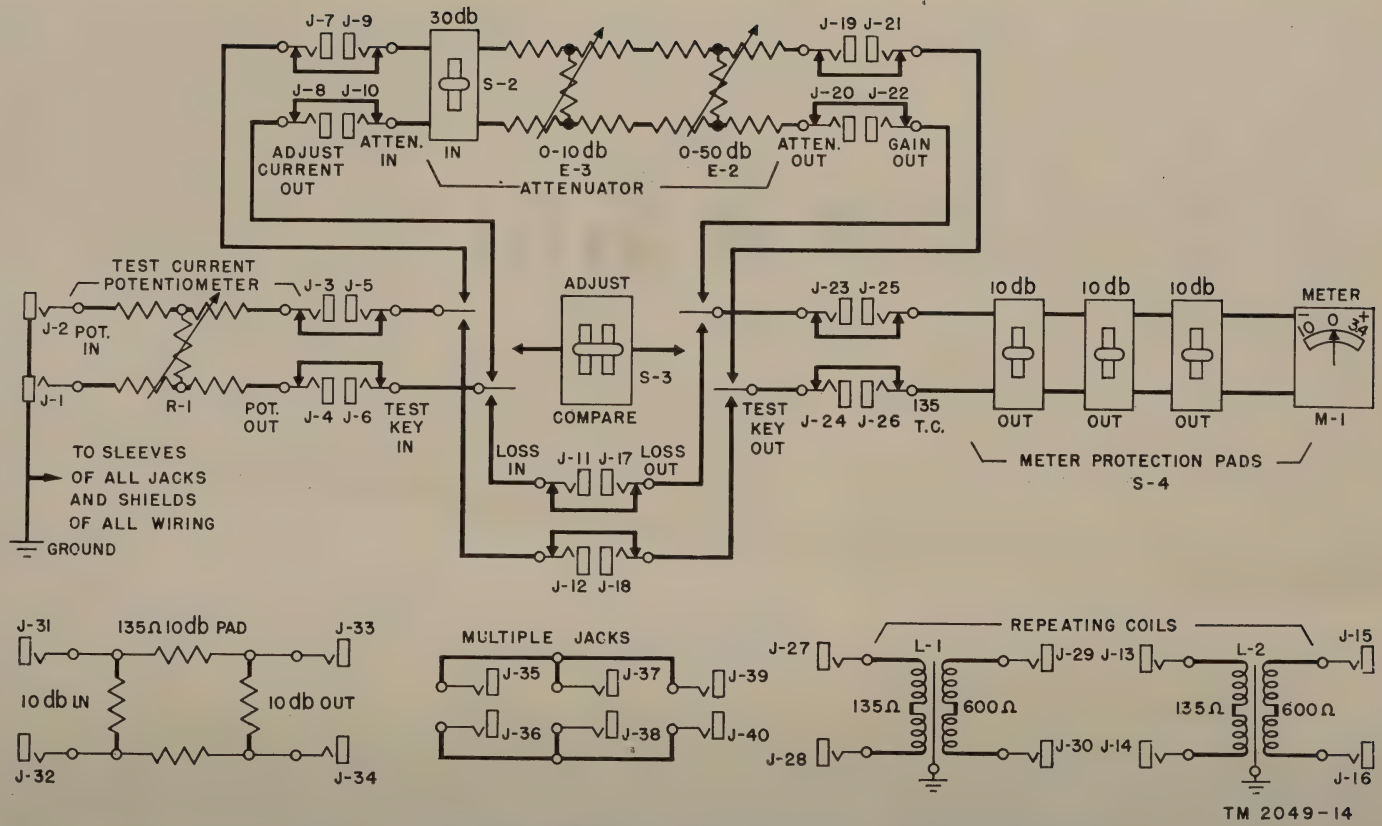

Figure 19. Transmission Measuring Set TS-569/FT, simplified schematic.

with the heater element and permit the input resistance of the thermocouple to be built out to 135 ohms when the heater current is 2.722 ma at any particular room temperature. The thermocouple provides a satisfactory means for the accurate measurement of small currents. This is accomplished through the thermoelectric voltage developed in the thermocouple by the heater element adjacent to it. This thermoelectric voltage is fed to the meter which measures its effective value in db.

j. JACKS. The jacks are of the normally closed type. They are tapped off at different points of the set to afford flexibility when making measurements.

k. DIAL 1, 2, AND 3 POTENTIOMETERS. These dials are used during the four steps of calibration. Their function is explained in paragraph 57.

l. TEST CURRENT POTENTIOMETER. This control is a slide wire potentiometer with a range of 5 to 7 db. Its function is to regulate the incoming testing signal.

Section II. TEST AND REPAIR EQUIPMENT

53. Tools and Materials

The tools and materials required for reconditioning, adjusting, and repairing Transmission Measuring Set TS–569/FT are listed in the tables below:

a. TOOLS.

Signal Corps or Quartermaster stock No.	Name of tool and description	Used to
6R41103	ADJUSTER, spring: (WECo 303).	Adjust the tension of springs.
6R41163	ADJUSTER, spring: (WECo 363).	Adjust the tension of springs.
NSNA	ADJUSTER, spring: (WECo 483A).	Adjust the tension of springs.
6Z1428	BRUSH: bristle, soft	Clean dust and dirt from various parts of the measuring set.
6Z1415–1	BRUSH: bristle, stiff	Clean dust and dirt from various parts of the measuring set.
6R40165C	BURNISHER: contact, (WECo No. 265C).	Clean contacts of jacks and key.
6R40868C	GAGE: gram 70–0–70 (WECo No. 68C).	Measure pressure of contacts and plunger springs.
6R40870J	GAGE: gram 0–150 (WECo No. 70J).	Measure pressure of springs.
NSNA	GAGE: gram 0–200 (WECo No. 79C).	Check contact pressure.

Signal Corps or Quartermaster stock No.	Name of tool and description	Used to
6Z8079	GAGE: gram 0–700 (WECo No. 62B).	Check contact pressure.
NSNA	GAGE: gram 0–1400 (WECo No. 158A).	Check jacks.
4E6168B	GAGE: gram 70–0–70 (WECo No. 68B).	Check lever operating pressure.
NSNA	GAGE: gram 0–1000 (WECo No. 79B).	Check lever operating pressure.
NSNA	GAGE: gram 0–6000 (WECo No. 79F).	Check pressure of battery key.
NSNA	GAGE: limiting (WECo No. 155A).	Check sleeves of jacks.
NSNA	GAGE: plug (WECo No. 154A)	Check jacks.
NSNA	GAGE: test (WECo No. 157A)	Open or close contacts of jacks.
6Q50004	HAMMER: riveting, 4 oz	
6R41285A	PLIERS: smooth jaw (WECo No. 485).	Make various adjustments on keys, jacks, and other parts.
6R4740–5	PLIERS: parallel jaw (WECo No. KS–7782).	Make various adjustments on keys, jacks, and other parts.
6R4735–6.1	PLIERS: duck-bill, 6″ (WECo No. KS–6015).	Make various adjustments on keys, jacks, and other parts.
4C7357A	PLUG: (WECo 241A)	Open or close contacts of jacks.
6R40848/1	SCREW DRIVER: 3½″ (WECo No. KS–6854).	Remove various parts.
6R41006	SCREW DRIVER: 30° offset (WECo No. 206).	Remove various parts.
6R41007	SCREW DRIVER: 90° offset (WECo No. 207).	Remove various parts.
6R40846	WRENCH: ⅜″ hex. single socket (WECo No. 46).	Remove various parts.
6R4083	WRENCH: 3/16″ and ¼″ open end (WECo No. 43).	Remove various parts.
6R40848	WRENCH: 7/32″ and ¼″ double end socket (WECo No. 48).	Remove various parts.
6R41217A	WRENCH: ¼″ and ⅜″ open end (WECo No. 417A).	Remove various parts.
6R4100	WRENCH: 5/16″ hex. offset wrench and screw driver (WECo No. 209).	Remove various parts.

b. Materials.

Signal Corps or Quartermaster stock No.	Name of tool and description	Used to
6G184.1	CARBON TETRACHLORIDE	Clean various parts.
8A805	CHEESECLOTH, bleached	Clean various parts.
NSNA	CLOTH, acetate (WECo No. 8950).	Clean various parts.
6Z7500–0000	PAPER, sand #0000 9″ x 11″ sheets.	Remove rust and corrosion from various parts.

Signal Corps or Quartermaster stock No.	Name of tool and description	Used to
QMC 51–S–4381–1	SOLVENT, dry cleaning (SD)	Clean various parts.
6Z7360	STICK, orange (WECo No. KS–6320).	Clean various parts.

54. Test Equipment

The following test equipment is used for performing tests on the transmission measuring set:

Signal Corps or Quartermaster stock No.	Name of tool and description	Used to make
3F4049	TEST SET I–49 Wheatstone bridge, TM 11–2019.	Precise resistance measurements.
3F4470–176	TEST UNIT I–176 General Purpose Multimeter, TM 11–2626.	Routine continuity measurements.

Section III. POWER REQUIREMENTS

55. Calibration

The power required to calibrate Transmission Measuring Set TS–569/FT is supplied by a single 1.5-volt Battery BA–30. The battery is in the circuit when the nonlocking battery key is held down. This key must be held operated during each step of calibration (par. 14).

56. Transmission Measurements

For transmission measurements, power is supplied either from an external source, such as Oscillator TS–401/U, or from the circuit being tested. Connections from the power source to the transmission measuring set are made through appropriate jacks on the front panel of the measuring set. The procedures for each type of test cover the required power connections.

Section IV. INSPECTING, STRIPPING, AND CLEANING

57. Inspecting

a. INSPECTION. Sight and touch will often determine the general condition of the transmission measuring set. Proceed as follows:

(1) Remove the set from the case by taking out the four mounting bolts (two on each side of the case).

(2) Place the measuring set on a work table or a flat, clean surface with the panel up.

(3) Look over the panel of the set for signs of rough or general wear, such as scratches or worn finish.

(4) Carefully inspect the jacks for any corrosion, dirt, or foreign matter that may affect their operation.

(5) Check the ground terminal for tightness. Be sure proper contact is made with the panel of the set.

(6) Inspect all screws and bolts for looseness and stripped threads.

(7) Check under the meter glass for dirt or dust.

(8) Be sure switches and knobs move freely.

(9) Turn the set over and place the control panel face down. (The two lifting handles on the top serve to protect the set when it is placed in this position.)

(10) Check all soldered connections. Be certain that close solder connections are not touching each other.

(11) Check wiring for broken leads, brittle insulation, corrosion, or other deterioration that will affect performance.

(12) Check for physical damage, such as cracked terminal strips, broken resistors, bent jacks, or damaged contacts on switches.

b. Repair Factors. After visually inspecting the equipment, analyze the extent of repair necessary, and see whether its condition warrants repair. Consider the two following factors:

(1) Whether the repair of the equipment justifies the expense involved and the urgency of returning the equipment into service. If there is urgent need for the equipment and a replacement is not available, the expense could be justified. If there is no urgent need and the repair involved would amount to rebuilding with the replacement of many expensive parts, the equipment should be salvaged.

(2) If it has been determined that the measuring set is to be salvaged, remove all parts that are in good condition, and place them in stock for re-use.

c. Replacing Parts.

(1) Dropping the set may cause extensive damage to the meter. If visual inspection shows the meter to be intact, check it further by calibration (par. 16). Replace the meter if it is damaged.

(2) If the panel has been bent excessively, and if the test keys, the potentiometer, the ATTENUATOR, and the calibrate-measure switch are damaged, or if the replacement of many expensive parts is required before the set may be returned to service, consider the set nonrepairable.

d. SALVAGING PARTS. If the set is nonrepairable, the procedure for removing parts that may be used in the repair of other equipment is as follows:

(1) Make a careful survey of what material may be issued for re-use in other equipment.

(2) Disassemble the equipment by disconnecting all soldered connections.

Caution: Do not unsolder the interconnections of the attenuator resistance coils when salvaging the equipment.

(3) Remove all controls and knobs from the face of the set and take out the necessary screws, nuts, and bolts from the interior of the set. Lift out the parts from the interior of the set.

(4) Check all electrical parts by using a voltohmmeter to test for proper resistance and continuity.

(5) Carefully examine the electrical and mechanical parts removed from the set to be sure they are in good serviceable condition before placing them in stock for re-use.

e. FABRICATING PARTS. When new parts cannot be obtained from supply stocks, emergency repairs may include the fabrication of simple parts. No attempt should be made to fabricate precision parts such as attenuator resistors, pads, etc., unless highly skilled personnel and precision shop facilities are available.

58. Stripping and Adjusting

Necessary repairs to the transmission measuring set often can be accomplished without disassembly of the components. Certain parts which can be easily removed, repaired, and replaced in the equipment may be found defective. Directions for removing and replacing these *pluck out* parts are given in the subparagraphs that follow.

a. BATTERY. Failure in the calibration circuit may be caused by a weak battery. Remove the battery by turning the cover counterclockwise one quarter turn and lifting the cover off. Check the battery case, spring, and cap for signs of corrosion. If corrosion is present, remove it with #000 sandpaper. Use solvent (SD) and a lint-free cloth to wipe out the interior of the case.

b. THERMOCOUPLE. When failure of the equipment is due to a

defective thermocouple, remove the thermocouple from its socket, check the spring contacts at the base, and be sure there is enough tension to afford a solid connection with the prongs of the thermocouple. Clean the contacts if dirt or dust is present.

c. JACKS. Failure of a circuit sometimes may be traced to particles of dirt or lint between contacts or other parts of the jack. To remove the jacks, unsolder the connections (being particularly careful that the wires and connections are labeled) and remove the bolts which hold the jacks to the panel.

d. KEYS. Dirt or sand particles between keys sometimes cause the keys to stick. To remove the keys, unsolder the connections and remove the bolts holding them to the panel.

e. TOOLS AND MAINTENANCE EQUIPMENT FOR KEYS AND JACKS. The tools, gages, and materials used in checking and adjusting keys and jacks of Transmission Measuring Set TS–569/FT are listed in paragraph 39*a.* and *b.*

59. Cleaning

a. EQUIPMENT. Use air pressure, if available, to blow out the accumulated dust, dirt, and other foreign matter. Clean the equipment in a semi-inclosed booth and, if possible, equip the booth with a vacuum vent to remove the dust blown from the equipment. Use probe sticks made of wood or insulating material for dislodging caked dirt, and toothpicks or their equivalent for hard-to-reach places.

b. CLEANING PROCEDURE.

(1) Clean the outside of the equipment with an air blower or lint-free cloth.

(2) Remove dirt or salt spray with a cloth moistened with clear water. Allow the equipment to dry before attempting any further cleaning.

(3) Remove the transmission measuring set from the case.

(4) Using an air blower, blow the dirt from the interior of the equipment.

Caution: Use care when cleaning the equipment with air pressure. Apply the air pressure in such a way that dust and dirt are blown away from contacts.

(5) Remove oil and grease with a cloth dampened with solvent, (SD). Wipe with a clean dry cloth.

(6) Remove covers from the ATTENUATOR and, using an air blower, blow dust and dirt from their interiors.

(7) Remove dust, corrosion, fungus, and similar foreign material on structural framework with fine sandpaper or a scratch brush, and clean with solvent (SD), where necessary.

Section V. TROUBLE LOCATION

60. Preliminary Procedure for Locating Trouble

a. Before attempting to locate trouble in Transmission Measuring Set TS–569/FT, carefully inspect the set to insure that no harm will occur through the presence of conditions (such as mechanical binding) which might damage the equipment permanently. Read the condensed theory of operation (ch. 5, sec. I). Refer to the trouble-shooting chart (par. 45) when performing tests and analyses, and make use of the schematic diagrams (figs. 19 and 24) and refer to the rear view of the transmission measuring set (fig. 20).

b. Make a visual inspection of the equipment for any signs of damage. Listed below are some defects that may be found:

(1) Loose mounting screws, nuts, and bolts.

(2) Poorly soldered connections.

(3) Damaged insulation.

(4) Pitted contacts on jacks, attenuator, and keys.

(5) Overheated resistors.

(6) Poor spring tension on wiping arm of potentiometers and attenuator.

(7) Exposed wiring which causes shorts with other wiring, terminals, or ground.

c. For sectionalizing trouble, make use of the simplified schematic (fig. 19) and the over-all schematic (fig. 24). Read the information on circuit data (ch. 5, sec. VII). Listed below are some of the steps for sectionalizing trouble:

(1) If the trouble is apparent in all operations and in all types of tests, check those parts that are involved in all operations, such as the meter, the thermocouple, etc.

(2) If the trouble appears only when making comparison tests, check the ADJUST-COMPARE key, the ATTENUATOR, jacks, etc.

(3) If the trouble appears only when calibrating the measuring set, check the BATTERY key, the battery, and other parts that are used in calibration.

(4) Use a voltohmmeter and check the resistances as given on the over-all schematic diagram (fig. 24).

(5) Always be sure the jacks are free of any foreign matter (such as broken pencil points) that may cause trouble.

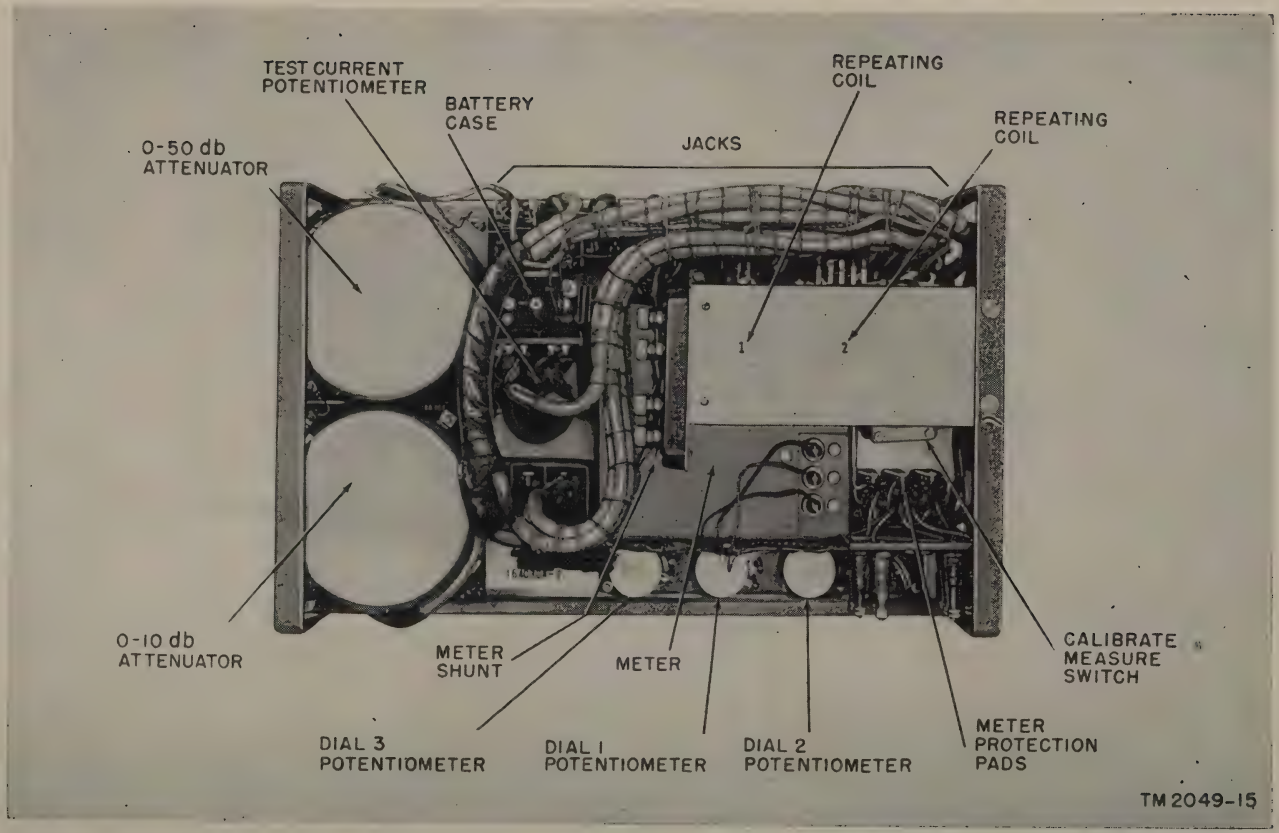

Figure 20. Rear View of Transmission Measuring Set TS-569/FT, component parts.

61. Trouble Location Chart

Action	Condition	Possible trouble	What to do
Calibration as described in paragraph 14.	METER does not calibrate as required.	1. Weak battery	1. Check battery for proper voltage.
		2. Damaged thermocouple	2. Check thermocouple; see that proper contact is being made and that it has the proper resistance.
		3. BATTERY key defective	3. Check contacts of BATTERY key. See that proper contact is made when the key is pressed.
		4. Calibrate-measure switch defective	4. Check switch contacts.
		5. Meter fails to operate	5. Check meter and replace if damaged.
		6. DIAL 1, 2, or 3 potentiometers faulty.	6. Check dial potentiometer and replace if damaged.
		7. Open or short in wiring of circuit	7. Check all wiring in circuit, and repair or replace.

Action	Condition	Possible trouble	What to do
Operation as described in paragraphs 17 through 30 for all tests.	METER will not make proper measurements.	1. Patching cords and plugs faulty	1. Check for short or open in plugs and cords.
		2. Jacks faulty	2. Check jack contacts and be sure there is no dirt or other foreign matter present.
		3. METER PROTECTION PADS defective.	3. Check pads and pad contacts.
		4. ATTENUATOR defective	4. Check ATTENUATOR for proper resistance. See that wiping arm is making proper contact.
		5. TEST CURRENT POTENTIOMETER defective.	5. Check POTENTIOMETER. See that it is clean and in good working order.
		6. Calibrate-measure switch defective	6. Check contacts of calibrate-measure switch.
		7. Faulty ground	7. Be certain sleeves of the jacks of the equipment under test are grounded to the sleeves of the jacks on the measuring set.
		8. ADJUST-COMPARE key defective	8. Check ADJUST-COMPARE key for proper contact.
		9. Meter fails to operate	9. Check meter; see that it is in proper working order.
		10. Damaged thermocouple	10. Check thermocouple; see that it is not burned out or damaged.
		11. 30-db IN ATTENUATOR key defective	11. When making tests where the gain is over 60 db, and the 30-db IN ATTENUATOR key is used, check the key and be sure it is operating.

Section VI. FITS AND TOLERANCES

62. General

This section contains data on test requirements and adjustments for Transmission Measuring Set TS–569/FT. The adjustments vary in nature, and include replacing an old spring with a new one, inserting insulated spacers between parts, etc. Be sure to tighten any screws or nuts which have been loosened. After repairs have been made involving the disassembly of a part, be sure that all tolerances and spring tensions are checked and are within the limits.

63. Removal and Adjustment of Parts

a. GENERAL. The removal of parts is often required to make it easier to accomplish the necessary repairs and adjustments. Be sure all wiring is marked to insure proper connections.

b. KEYS. When adjusting or repairing a key, remove it by unsoldering the wiring connections and taking out the screws holding the key in the panel. The following subparagraphs give the adjustments for the various types of keys used in the measuring set.

(1) *BATTERY key (WECo 547A) stock No. 4C5105.47A.*

(a) Normal position. When the plunger is at the top of its stroke and the key not operated, it is in normal position.

(b) Operated position. When the plunger is depressed to the limit of its stroke, closing the contacts, it is in operated position.

(c) Plunger movement. The plunger should move freely in its bearing and should return to its normal position when pressure is released.

(d) How to adjust. Adjust close to the point where the spring leaves the clamping plate and insulation. Use smooth jaw pliers WECo No. 485A, stock No. 6R41285A.

(e) Plunger spring pressure. The pressure of the plunger spring against the plunger with the key in the unoperated position should be a minimum of 50 grams and a maximum of 100 grams. Use WECo No. 70J gage, stock No. 6R40870J.

(f) Plunger operating pressure. The pressure required to depress the plunger to the limit of its stroke should be a minimum of 650 grams and a maximum of 1,350 grams. Use WECo No. 79F gage.

(g) *Contact pressure.* There should be a minimum pressure between all closed contacts of 50 grams. Use WECo No. 68B gage, stock No. 4E6168B.

(h) *Contact clearance.* The clearance between contacts normally open, or contacts that are opened when the key is operated, should be a minimum of 0.015 inch.

(i) *Spring clearance.* The clearance between any spring and the frame, whether in the operated or unoperated position of the key, should be a minimum of 0.015 inch.

(j) *Contact follow.* There should be a minimum of 0.010-inch follow on all contacts.

(k) *Contact alinement.* Be certain the contact point meets properly with the opposing contact at all times. To aline, loosen the assembly screw with a screw driver and shift the spring as required to make proper contact alinement.

(2) *ADJUST-COMPARE key (WECo No. 517A).*

(a) *Normal position.* The lever is in normal position when it is perpendicular to the top of the panel.

(b) *Operated position.* When the lever is thrown either to the extreme front or rear, with all normally open contacts closed and all normally closed contacts open, it is in operated position.

(c) *Lever movement.* The rollers and cams should turn freely in their bearings.

(d) *How to adjust.* Remove contact assembly screw and, using duck-bill pliers (WECo No. KS–6015, stock No. 6R4735–6.1), hold the contact near the base and adjust the spring tension by bending.

(e) *Lever pressure.* The pressure required to operate the lever from the normal position to one of the operated positions should be a minimum of 200 grams and a maximum of 475 grams. Use WECo No. 79B gage.

(f) *Spring clearance.* There should be a minimum clearance of 0.014 inch between springs designed not to make contact and between any spring and the frame, whether in the operated or unoperated position.

(g) *Contact pressure.* The pressure between all closed contacts should be a minimum of 150 grams and a maximum of 300 grams. Use WECo No. 79B gage to check maximum and WECo No. 79C gage to check minimum pressure.

(h) *Contact alinement.* The contact disks on the springs should rest flat against the contact of the lever assembly.

(3) *METER PROTECTION PADS (WECo No. 2AJR) and 30-db IN ATTENUATOR key (WECo No. 2GE).*

(a) Normal position. When the lever is perpendicular to the top of the panel, it is the normal position.

(b) Operated position. When the lever is pulled to the OUT or IN ATTENUATOR position, it is in the operated position.

(c) Lever movement. The rollers and cams should turn freely in their bearings.

(d) How to adjust. Adjust close to the point where the spring separates clamping plate and insulation. Use smooth jaw pliers (WECo No. 485A stock No. 6R41285A).

(e) Plunger spring pressure. The pressure of the plunger spring against the roller should be a maximum of 225 grams. Use WECo No. 62B gage, stock No. 6Z8079.

(f) Contact separation. The separation between all contacts normally open, or contacts that are opened when the key is operated, should be a minimum of 0.014 inch.

(g) Spring Clearance. The clearance between any spring designed not to make contact and any spring and the frame, whether in the operated or unoperated position, should be a minimum of 0.014 inch.

(h) Contact pressure. There should be a minimum pressure of 50 grams between all normally closed contacts and contacts that are closed when the key is operated. Use WECo No. 68B gage.

(i) Contact follow. There should be a minimum of 0.008 inch follow on all contacts.

(j) Contact alinement. The contacts should line up so that they fall within the boundary of the opposing contact at all times.

(k) Lever release of 30-db IN ATTENUATOR key. The release of the lever should be a minimum of 50 grams. Use WECo 68B gage, stock No. 4E6168R.

c. JACKS. When it has been determined that a jack should be removed to facilitate repair or adjustment, unsolder the wiring connections and remove the mounting screw holding the jack in the panel. The following subparagraphs give the correct tolerances and the tools required in adjusting jacks.

(1) *How to adjust.* Adjust close to the point where the spring separates clamping plate and insulation. Use smooth jaw pliers WECo No. 485A, stock No. 6R41285A.

(2) *Sleeve wear.* Use WECo No. 155A gage. This gage should not enter the sleeve to the stop shoulder in any position.

(3) *Assembly screws.* Screws should be sufficiently tight to hold the springs securely in position.

(4) *Contact alinement.* The point of contact should fall wholly within the boundary of the opposing contact at all times.

(5) *Spring position.* Insert WECo No. 154A gage fully in the jack. The tip spring crimp should rest between the annular lines on the gage.

(6) *Contact separation.* Insert WECo No. 157A gage in the jack and rotate through 1 revolution. The contacts that normally are closed should remain open, and the contacts that normally are open should remain closed.

(7) *Contact follow.* When the tip spring is operated there should be a minimum follow of 0.010 inch of the inside contact spring.

(8) *Spring tension.* Insert WECo 157A gage in the jack. The pressure of the tip spring on the tip of the gage should be a minimum of 500 grams and a maximum of 1,200 grams. Use WECo 158A gage.

Section VII. CIRCUIT DATA

64. General

This section explains the functions of the various circuits of Transmission Measuring Set TS–569/FT. Each function is explained in a separate paragraph, with reference made to the appropriate illustration. The measuring set has two circuits, one for calibration of the thermocouple and the other for making comparison tests. It is assumed, in the following explanations, that the battery is supplying correct voltage to the set and that all keys, switches, etc., are functioning properly.

65. Calibration Circuit

The steps of calibration are accomplished by use of the calibrate-measure switch S–1, BATTERY key S–5, and the DIAL 1, 2, and 3 potentiometers. These steps are given in detail in paragraph 14. The current flow during calibration is as follows:

a. DIAL 1 is the battery voltage adjustment.

(1) When the calibrate-measure switch is in the DIAL 1 position and BATTERY key S–5 is depressed, a circuit is completed (fig. 21) which allows current to flow from battery BT–1 through the BATTERY key S–5, the 120-

ohm resistor R–13, the DIAL 1 potentiometer to the negative side of the meter shunt and back to the negative side of the battery. The current flow causes a voltage drop across the resistive elements and a portion of this voltage drop is applied to the parallel circuit formed by the center arm of the DIAL 1 potentiometer, the 135-ohm resistor R–14, the positive side of the meter shunt, the meter, and battery BT–1.

(2) An exact 0 db meter reading obtained by the correct adjustment of DIAL 1 potentiometer corresponds to a dc of 2.722 ma through a standard 135-ohm resistance, or 1 mw.

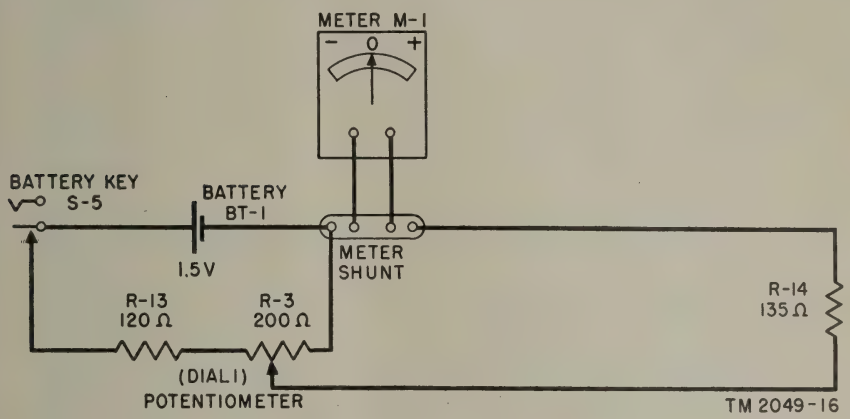

Figure 21. Current flow with calibrate-measure switch in DIAL 1 position.

b. DIAL 2 is the thermocouple heater circuit resistance adjustment. When the calibrate-measure switch is in the DIAL position, the 135-ohm resistor R–14 of the DIAL 1 circuit is replaced by the series circuit (fig. 22) consisting of the 20-ohm resistor R–33, the thermocouple heater E–1, and the DIAL 2 potentiometer. The

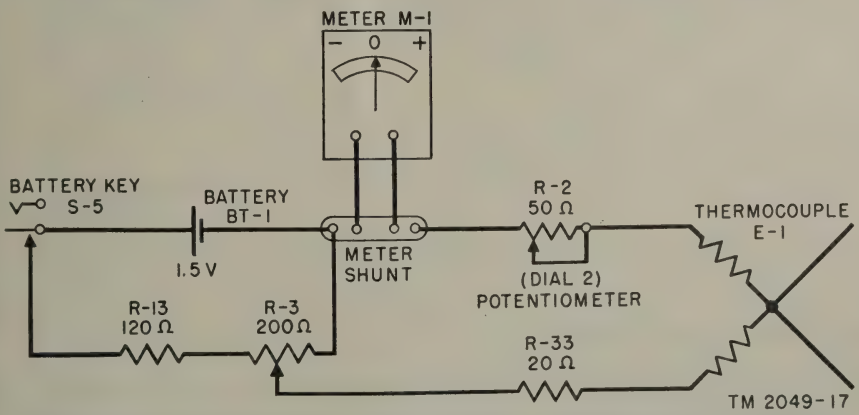

Figure 22. Current flow with calibrate-measure switch in DIAL 2 position.

adjustment of DIAL 2 potentiometer to obtain the 0 db meter reading establishes the heater resistance circuit at 135 ohms.

c. DIAL 3 is the thermocouple sensitivity adjustment.

(1) When the calibrate-measure switch is in the DIAL 3 NORMAL position, the meter which has been connected to the meter shunt for the preceding adjustments is removed from the shunt and then connected to the galvanometer terminals of the thermocouple in series with the rheostat DIAL 3 (fig. 23). This rheostat, which is adjusted until the meter reads 0 db, is provided to compensate for the difference in efficiencies of thermocouples so that the meter may always be made to read 0 db when a current corresponding to 1 mw (2.722 ma) is flowing through the 135-ohm heater circuit.

(2) Some thermocouples may produce a different meter reading when the current through the heater element is reversed. The dial must, therefore, be set so that the mean of the two readings is 0. This is checked by operating the switch to the DIAL 3 REVERSED position which reverses the current through the heater (dotted lines, fig. 23). If the meter does not read 0 db, the DIAL 3 rheostat is readjusted so that, with the heater current in one direction, the meter reads low by the same amount that it reads high when the current is reversed.

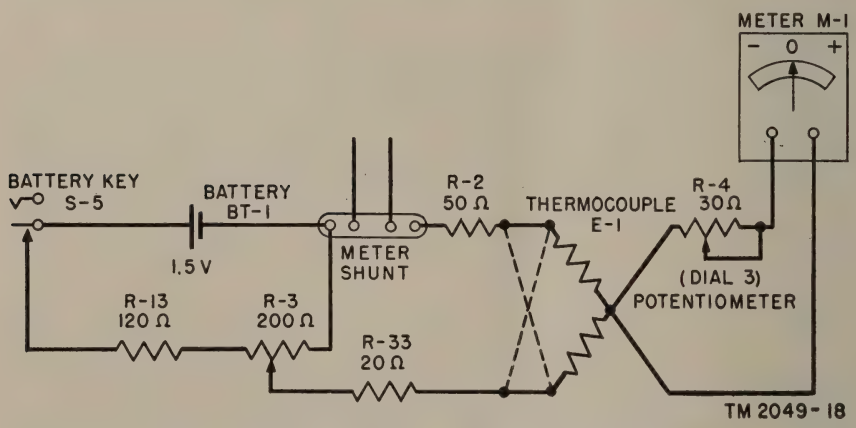

Figure 23. Current flow with calibrate-measure switch in DIAL 3 position.

66. Comparison Circuit

This circuit is used in making all tests and measurements as described in paragraphs 17 through 30. It is controlled by the test

key marked ADJUST-COMPARE. The ADJUST-COMPARE key is made up of two units similar to a four-pole double-throw switch. The test power is connected to one pair of transfer contacts and the current measuring circuit to the other pair. In this way two circuit paths are set up for comparison purposes. One contains the variable ATTENUATOR, with jacks provided at different points in the circuit to afford flexibility for the different types of measurements. The other provides a path around the ATTENUATOR. Refer to the simplified and over-all schematic diagrams (figs. 19 and 24) for the current flow of the comparison circuit. The ATTENUATOR consists of three units in tandem. Two of the attenuator units are operated by controls. One of these controls has a 0 to 50 db range in steps of 10 db. The other control has a 0 to 10 db range in steps of 1 db. The third unit provides 30-db attenuation. It is controlled by a locking key, designated 30-db IN ATTENUATOR. It is normally out of the circuit. The impedance of these units in tandem is 135 ohms.

67. Tracing Circuits

Figure 24 is a schematic diagram of the complete set. The measuring set is composed of two circuits, one for calibrating and the other for comparison tests. The calibration circuit is described in paragraph 65 with simplified schematics showing the flow of current for each adjustment. All connections for gain and loss measurements are made through jacks by patching cords. When tracing a faulty circuit, note the operation in which the trouble is present and proceed by eliminating the parts step by step. For example, if the fault is in the calibration circuit only, refer to the schematic diagram and check the parts used for calibration, such as battery, battery case and contacts, BATTERY key, calibrate-measure switch, DIAL potentiometers, thermocouple, and associated wiring, eliminating those that function properly.

Section VIII. FINAL TESTING

68. General

This section is intended as a guide to be used in determining the quality of a repaired Transmission Measuring Set TS–569/FT. The minimum test requirements outlined below may be performed by maintenance personnel with adequate test equipment and the necessary skills. Repaired equipment meeting these requirements will furnish uniformly satisfactory operation.

69. Preparation and Testing

Make all operational tests after physical repairs or adjustments have been made to the transmission measuring set. Test the circuits, and make sure that they function properly and meet all requirements of operation. If repairs have been made correctly, the electrical requirements should be fulfilled. The electrical and mechanical tests which the equipment must meet, and the methods that assigned personnel must apply in performing these tests are given in the table below.

Caution: When tracing circuits with an ohmmeter, remove the thermocouple and disconnect the meter; these parts are damaged easily by excessive current.

Part or circuit	Requirements	Methods for testing	What to do if requirements are not met
Panel and framework assembly.	Completeness; parts not bent or distorted; sufficient ruggedness for shipment and handling.	Sight, touch	Replace missing or broken parts; straighten any bent parts, or replace. Use old parts as patterns for fabricating new parts.
Rivets, screws, bolts, and nuts.	Check for pressence, tightness, stripping of threads, etc.	Sight; touch	Tighten by hand or wrench; replace stripped screws, bolts, nuts, etc. Ring-stake and retap stripped threaded holes in all metal. When ring-staking is not practicable, redrill and retap for larger screw, or use bolt, lockwasher, and nut. Replace all badly burred screws, bolts, and nuts which cannot be engaged by screw driver or wrench.
Control knobs.	Check for tightness	Touch	Tighten with screw driver.
Meter damping key.	With calibrate-measure switch in one of the calibrate positions, hold BATTERY key down and press meter damping key. Pointer should drop back.	Sight	Replace or repair defective parts or wiring.
Calibration circuit.	Calibrate the set in all positions of the calibrate-measure switch.	See paragraph 16	Repair or replace defective parts or wiring.

69. Preparation and Testing

Make all operational tests after physical repairs or adjustments have been made to the transmission measuring set. Test the circuits, and make sure that they function properly and meet all requirements of operation. If repairs have been made correctly, the electrical requirements should be fulfilled. The electrical and mechanical tests which the equipment must meet, and the methods that assigned personnel must apply in performing these tests are given in the table below.

Caution: When tracing circuits with an ohmmeter, remove the thermocouple and disconnect the meter; these parts are damaged easily by excessive current.

Part or circuit	Requirements	Methods for testing	What to do if requirements are not met
Panel and framework assembly.	Completeness; parts not bent or distorted; sufficient ruggedness for shipment and handling.	Sight, touch	Replace missing or broken parts; straighten any bent parts, or replace. Use old parts as patterns for fabricating new parts.
Rivets, screws, bolts, and nuts.	Check for pressence, tightness, stripping of threads, etc.	Sight; touch	Tighten by hand or wrench; replace stripped screws, bolts, nuts, etc. Ring-stake and retap stripped threaded holes in all metal. When ring-staking is not practicable, redrill and retap for larger screw, or use bolt, lockwasher, and nut. Replace all badly burred screws, bolts, and nuts which cannot be engaged by screw driver or wrench.
Control knobs.	Check for tightness	Touch	Tighten with screw driver.
Meter damping key.	With calibrate-measure switch in one of the calibrate positions, hold BATTERY key down and press meter damping key. Pointer should drop back.	Sight	Replace or repair defective parts or wiring.
Calibration circuit.	Calibrate the set in all positions of the calibrate-measure switch.	See paragraph 16	Repair or replace defective parts or wiring.

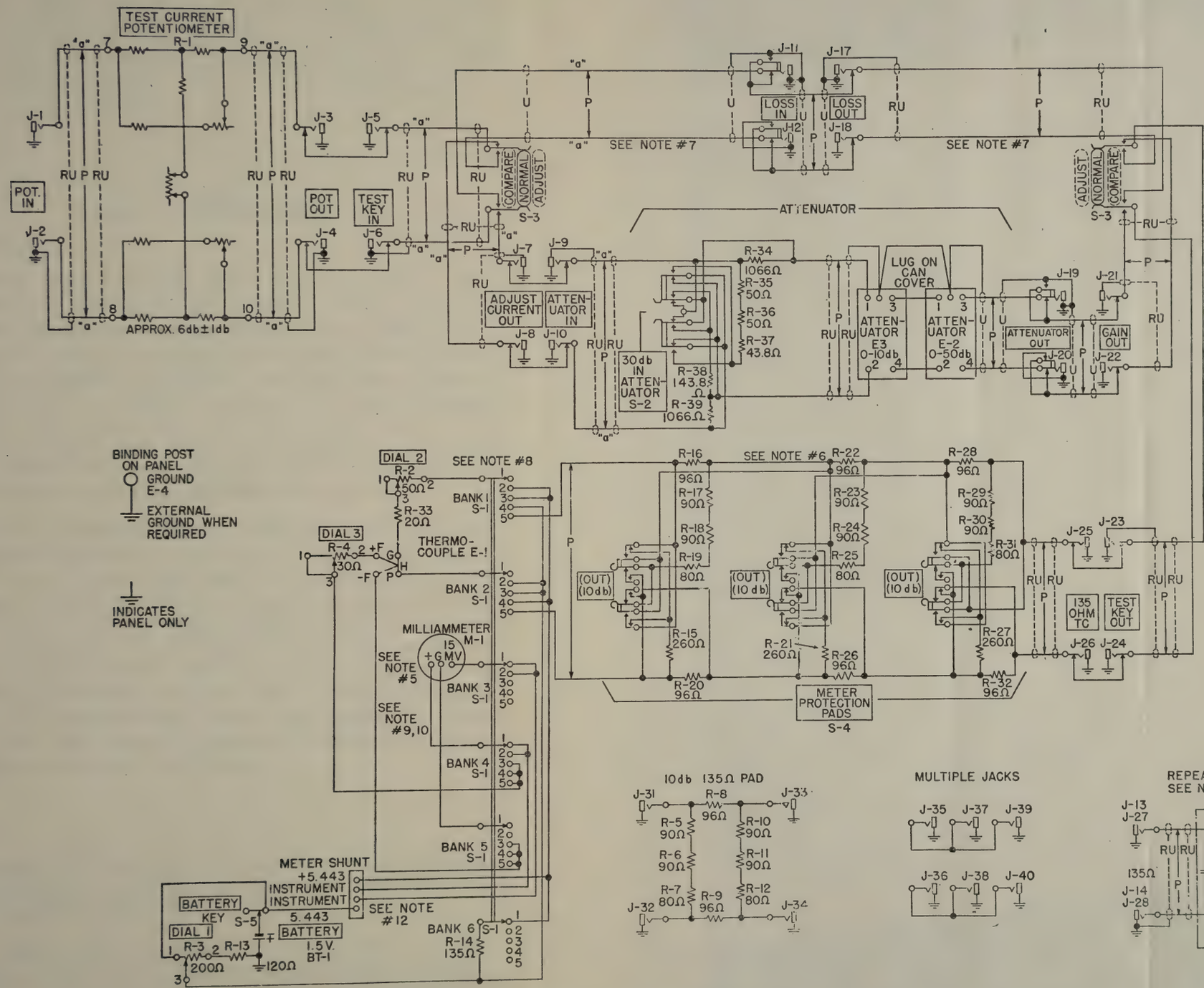

NOTES:

1. "P" DENOTES PAIR.
2. "RU" DENOTES SHIELDED CABLE
3. "U" DENOTES SHIELDED WIRE
4. "a" LEADS DESIGNATED AS SUCH SHALL RUN IN A SEPARATE CABLE.
5. DESIGNATION OF SWITCH POSITIONS

SWITCH POSITION	DESIGNATION
1	DIAL 1
2	DIAL 2
3	DIAL 3 NORMAL
4	DIAL 3 REVERSED
5	MEASURE

6. THE WIRING BETWEEN THE S-4 METER PROTECTION PADS AND ASSOCIATED RESISTANCES SHALL NOT EXCEED 6 INCHES.
7. THE SHIELDED WIRING BETWEEN TWO UNITS OF THE ADJUST-COMPARE KEY (S-3) EITHER BY WAY OF THE LOSS IN JACKS (J-11, J-12) AND LOSS OUT JACKS (J-17, J-18) OR BY WAY OF THE 0-10 db ATTENUATOR (E-3) OR 0-50 db ATTENUATOR (E-2) SHALL NOT EXCEED 10 FEET.
8. BANK #1 OF SWITCH IS NEAREST THE PANEL.
9. THE TOTAL RESISTANCE OF LEADS AND CONTACT BETWEEN THE MILLIAMETER (M-1) AND THE ASSOCIATED SHUNT SHOULD BE AS NEAR .06 OHM AS POSSIBLE.
10. THE WIRING BETWEEN THE MILLIAMETER AND THE SHUNT SHALL BE 20 GAUGE.
11. THIS EQUIPMENT IS PROVIDED WITH TWO IMPEDANCE MATCHING TRANSFORMERS TERMINATED ON THE JACK PANEL.
12. THE METER SHUNT IS SUPPLIED WITH THE METER.

TM 2049-19

Figure 24. Transmission Measuring Set TS-569/FT, over-all schematic.

Part or circuit	Requirements	Methods for testing	What to do if requirements are not met
Comparison circuit.	Set should operate satisfactorily under all tests. Details for making these tests are given in paragraphs 17 through 30.	Use a set known to be operating properly and make a comparison.	Replace or repair missing or broken parts or wiring. Use worn-out part as a model when fabricating a new part.

Section IX. REFINISHING

70. Appearance

a. General. Check all metal surfaces and the finish of the leather handle for appearance and condition. From a protective and durability standpoint, the finish should show no decided wear and should not be chipped or otherwise damaged. Where the metal finish has been completely removed or has worn thin, or where it has been removed as a result of sanding or scratch brushing, retouch such surfaces if they cover only small areas. If the damaged or bare spots cover large areas, completely refinish the entire part. Slightly discolored, spotted, faded, or stained surfaces are permissible, provided the original finish is intact.

b. Finishing Procedure. After sanding or scratch brushing, retouch damaged surfaces by applying one coat of clear lacquer to parts having a bright finish, such as zinc and nickel-plated surfaces, and by applying one coat of matching enamel or paint on painted surfaces. Do not apply lacquer on contact points of keys, parts of springs, or other surfaces which might affect the functioning of the set. Follow the instructions in paragraph 37 for refinishing the measuring set. Also refer to TB SIG 13, Moistureproofing and Fungiproofing Signal Corps Equipment. If the etching on the control panel has worn off or otherwise become illegible, replace with a new control panel.

71. Wiring

Examine wiring and make sure it is in good condition. Slightly scarred outer covering is satisfactory, but if the outer insulation is broken or cracked, replace with new wiring.

Caution: Never change the length of wiring leads. Be careful when making soldered connections. A slight amount of excess solder dropped inside the equipment may cause short circuits.

APPENDIX I

SHIPMENT AND STORAGE

1. Disassembly

The circumstances involved in shipment and storage vary, and therefore no definite procedure for repacking can be given. The following instructions are recommended as a guide for preparing the transmission measuring set for transportation and storage.

a. Remove the battery from its compartment, and store it inside the top cover of the carrying case, using the clips provided.

b. If a ground lead was connected to the ground terminal on the front panel of the set, disconnect this lead.

c. Fasten the cover of the set to the carrying case.

2. Repacking for Shipment or Limited Storage

a. The exact procedure in repacking for shipment or limited storage depends upon the material available and the conditions under which the equipment is to be shipped or stored. Refer to paragraph 8*b* and follow the instructions given, in the reverse order.

b. Whenever practicable, place a dehydrating agent such as silica gel inside the case. Protect the case with a waterproof paper barrier. Seal the seams of the paper barrier with waterproof sealing compound or tape. Pack the protected case in a padded wooden case, providing at least 3 inches of excelsior padding or some similar material between the paper barrier and the packing case.

APPENDIX II

REFERENCES AND IDENTIFICATION TABLE OF PARTS

Note. For availability of items listed, check FM 21–6 and Department of the Army Supply Catalog SIG 1. Also see latest issue of FM 21–6 for applicable technical bulletins, supply bulletins, modification work orders, and changes.

---

1. Supply Publications

SIG 4–1, Allowances of Expendable Supplies for Tactical Organizations.

SIG 4–2, Allowances of Expendable Supplies for Schools, Training Centers, Boards, and Fixed Installations.

2. Technical Manuals on Auxiliary Equipment

TM 11–2040, Oscillator TS–401/U.

3. Painting, Preserving, and Lubrication

TB SIG 13, Moistureproofing and Fungiproofing Signal Corps Equipment.

TB SIG 66, Winter Maintenance of Signal Equipment.

TB SIG 72, Tropical Maintenance of Ground Signal Equipment.

TB SIG 75, Desert Maintenance of Ground Signal Equipment.

4. Packaging and Packing Instructions

a. Joint Army-Navy Packaging Specifications.

JAN–D–169, Desiccants, Activated.

JAN–P–100, General Specifications.

JAN–P–106, Boxes, Wood, Nailed.

JAN–P–108, Boxes, Fiberboard, Interior and Exterior.

JAN–P–116, Preservation, Methods of.

JAN–P–125, Barrier Material, Waterproof.

JAN–P–131, Barrier Material, Moisture-Vaporproof, Flexible.

b. U. S. Army Specifications.

100–2E, Marking Shipments by Contractors (and Signal Corps Supplement thereto).

c. Signal Corps Instructions.

720–7, Standard Pack.
726–15, Interior Marking.

5. Forms

WD AGO Form 468 (Unsatisfactory Equipment Report).

AF Form 54 (Unsatisfactory Report).

6. List of Abbreviations

ampl	amplifier
approx	approximately
Atten	attenuator
cy	cycle(s)
db	decibel(s)
dc	direct current
dbm	decibels referred to 1 milliwatt in 600 ohms
kc	kilocycle(s)
ma	milliampere(s)
meas.	measure
mw	milliwatt(s)
pot.	potentiometer
v	volts(s)
w	watt(s)

Identification Table of Parts for Transmission Measuring Set TS–569/FT

(*Note.* The fact that an item appears in this manual is not sufficient basis for requisitioning the part. Requisitions must cite an authorized basis, such as T/O & E, T/A, T/BA, SIG 6, SIG 7 & 8, SIG 7-8-10, SIG 10, list of allowances of expendable material, or other authorized supply basis. For an index of available supply catalogs in the Signal portion of the Department of the Army Supply Catalog, see the latest issue of SIG 1.)

Ref symbol	Name of part and description	Function of part	Signal Corp stock No.
BT–1	BATTERY, dry: Sig C Battery BA–30; 1½ v; cylindrical; flat surface type terminal.	Supplies current for calibration of transmission measuring set.	3A30
E–4	POST, binding: Eby Commander #P–3	Ground terminal	
L–1	COIL: repeating; impedance ration 600 to 135; freq range 200 to 150,000 cps; WECo #146A.	Used for making transmission measurements on 600-ohm circuits.	3C1399–146A
L–2	COIL: same as L–1	Same as L–1	Same as L–1.
J–1	JACK: for two conductor plug; WECo #218J	Used for POTENTIOMETER-IN connection.	4C4818J
J–2	JACK: same as J–1	Same as J–1	Same as J–1
J–3	JACK: same as J–1	Used for POTENTIOMETER-OUT connection.	Same as J–1
J–4	JACK: same as J–1	Same as J–3	Same as J–1
J–5	JACK: same as J–1	Used for TEST KEY IN connection	4C4818J
J–6	JACK: same as J–1	Same as J–5	Same as J–1
J–7	JACK: same as J–1	Used for ADJUST CURRENT OUT connection.	Same as J–1
J–8	JACK: same as J–1	Same as J–7	Same as J–1
J–9	JACK: same as J–1	Used for ATTENUATOR IN connection	Same as J–1
J–10	JACK: same as J–1	Same as J–9	Same as J–1
J–11	JACK: for two conductor plug; WECo #225CE	Used for LOSS IN connection	
J–12	JACK: same as J–11	Same as J–11	
J–13	JACK: for two conductor plug; WECo #221E	Used in making measurements on 600-ohm circuits.	2Z5521
J–14	JACK: same as J–13	Same as J–13	Same as J–13

Identification Table of Parts for Transmission Measuring Set TS–569/FT (contd)

Ref symbol	Name of part and description	Function of part	Signal Corps stock No.
J–15	JACK: same as J–13	Same as J–13	Same as J–13
J–16	JACK: same as J–13	Same as J–13	Same as J–13
J–17	JACK: for two conductor plug; WECo #218J	Used for LOSS OUT connection	4C4818J
J–18	JACK: same as J–17	Same as J–17	4C4818J
J–19	JACK: for two conductor plug; WECo #225CE	Used for ATTENUATOR OUT connection	
J–20	JACK: same as J–19	Same as J–19	
J–21	JACK: for two conductor plug; WECo #218J	Used for GAIN OUT connection	4C4818J
J–22	JACK: same as J–21	Same as J–21	Same as J–21
J–23	JACK: same as J–21	Used for TEST KEY OUT connection	Same as J–21
J–24	JACK: same as J–21	Same as J–23	Same as J–21
J–25	JACK: same as J–21	Used for 135 OHM T. C. connection	Same as J–21
J–26	JACK: same as J–21	Same as J–25	Same as J–21
J–27	JACK: for two conductor plug; WECo #221E	Used in making measurements on 600-ohm circuits.	2Z5521
J–28	JACK: same as J–27	Same as J–27	Same as J–27
J–29	JACK: same as J–27	Same as J–27	Same as J–27
J–30	JACK: same as J–27	Same as J–27	Same as J–27
J–31	JACK: same as J–27	Used for the 10-db 135-ohm IN and OUT connections.	2Z5521
J–32	JACK: same as J–27	Same as J–31	Same as J–27
J–33	JACK: same as J–27	Same as J–31	Same as J–27
J–34	JACK: same as J–27	Same as J–31	Same as J–27
J–35	JACK: same as J–27	Used for multiple connections	Same as J–27
J–36	JACK: same as J–27	Same as J–35	Same as J–27
J–37	JACK: same as J–27	Same as J–35	Same as J–27
J–38	JACK: same as J–27	Same as J–35	Same as J–27
J–39	JACK: same as J–27	Same as J–35	Same as J–27

J–40	JACK: same as J–27	Same as J–35	Same as J–27
S–2	KEY: lever type; locking type; WECo #2GE	Operates 30-db-IN ATTENUATOR	4C5262GE
S–3	KEY: with key-grouping bar; locking type; WECo #517A	ADJUST-COMPARE key.	
S–4	KEY: with lever handle; nonlocking type; WECo #2AJR	Operates meter protection pads.	
S–5	KEY: switchboard; push-button; nonlocking type; WECo #547A	Operates battery	4C5105.47A
M–1	METER, milliammeter: DC; scale calibrated in db; 10–0–3.4; accuracy for full scale deflection ±0.6 db; current for full scale deflection 200 ma; calibrated for a ⅛″ steel panel; equipped with a shunt; WECo #KS–7897.	Used for making all measurements.	
E–2	POTENTIOMETER: 0–50 db; WECo #49A	Used for increasing or decreasing attenuation in the circuit.	
E–3	POTENTIOMETER: 0–10 db; WECo #48A	Same as E–2.	
R–1	RESISTOR, variable: 6 db + or −1 db; WECo #50A	TEST CURRENT POTENTIOMETER; adjusts testing current.	
R–2	RESISTOR, variable: 50 ohms; WECo #KS–7882	DIAL 2 POTENTIOMETER adjusts input resistance to the thermocouple.	
R–3	RESISTOR, variable: 200 ohms; WECo #KS–7881	DIAL 1 POTENTIOMETER controls battery current to the meter.	
R–4	RESISTOR, variable: wire wound; 30 ohms ±10%; 3 w; WECo #KS–7883.	DIAL 3 POTENTIOMETER adjusts meter current to the thermocouple.	2Z7277.2
R–5	RESISTOR, fixed: 90 ohms; WECo #64F	Part of 10-db 135-ohm pad.	
R–6	RESISTOR, fixed: 90 ohms; WECo #64F	Same as R–5.	
R–7	RESISTOR, fixed: 80 ohms, WECo #64F	Same as R–5.	
R–8	RESISTOR, fixed: 96 ohms: WECo #64F	Same as R–5.	
R–9	RESISTOR, fixed: same as R–8	Same sa R-5.	
R–10	RESISTOR, fixed: 90 ohms; WECo #64F	Same as R–5.	
R–11	RESISTOR, fixed: same as R–10	Same as R–5.	
R–12	RESISTOR, fixed: 80 ohms; WECo #64F	Same as R–5.	
R–13	RESISTOR, fixed; wire wound on bakelite core; 120 ohms; ±1%; ¼″ w; WECo #106A.	In the calibration circuit, controls current flow from the battery.	3Z6012–5
R–14	RESISTOR, fixed; 135 ohms; WECo #106C	In the calibration circuit, provides added resistance to maintain proper current flow from the battery.	

Identification Table of Parts for Transmission Measuring Set TS–569/FT (contd)

Ref symbol	Name of part and description	Function of part	Signal Corps stock No.
R–15	RESISTOR, fixed: 260 ohms; WECo #64F	Part of meter protection pads.	
R–16	RESISTOR, fixed: 96 ohms; WECo #64F	Same as R–15	
R–17	RESISTOR, fixed: 90 ohms; WECo #64F	Same as R–15.	
R–18	RESISTOR, fixed: same as R–17	Same as R–15.	
R–19	RESISTOR, fixed: 80 ohms; WECo #64F	Same as R–15.	
R–20	RESISTOR, fixed: 96 ohms; WECo #64F	Same as R–15.	
R–21	RESISTOR, fixed; 260 ohms; WECo #64F	Same as R–15.	
R–22	RESISTOR, fixed: 96 ohms; WECo #64F	Same as R–15.	
R–23	RESISTOR, fixed: 90 ohms; WECo #64F	Same as R–15.	
R–24	RESISTOR, fixed: same as R–23	Same as R–15.	
R–25	RESISTOR, fixed: 80 ohms; WECo #64F	Same as R–15.	
R–26	RESISTOR, fixed: 96 ohms; WECo #64F	Same as R–15.	
R–27	RESISTOR, fixed: 260 ohms; WECo #64F	Same as R–15.	
R–28	RESISTOR, fixed: 96 ohms; WECo #64F	Same as R–15.	
R–29	RESISTOR, fixed: 90 ohms; WECo #64F	Same as R–15.	
R–30	RESISTOR, fixed: same as R–29	Same as R–15.	
R–31	RESISTOR, fixed: 80 ohms; WECo #64F	Same as R–15.	
R–32	RESISTOR, fixed: 96 ohms: WECo #64F	Same as R–15.	
R–33	RESISTOR, fixed: 20 ohms; WECo #111A	Resistance in thermocouple circuit to permit input resistance of thermocouple to be built out to 135 ohms.	
R–34	RESISTOR, fixed: 1066 ohms; WECo #106B	Part of 30-db Attenuator.	
R–35	RESISTOR, fixed: 50 ohms; WECo #64F	Same as R–34.	
R–36	RESISTOR, fixed: same as R–35	Same as R–34.	
R–37	RESISTOR, fixed: 43.8 ohms; WECo #64F	Same as R–34.	
R–38	RESISTOR, fixed: 143.8 ohms; WECo #106B	Same as R–34.	
R–39	RESISTOR, fixed: 1066 ohms; WECo #106B	Same as R–34.	

	SOCKET, tube: 4 prong bayonet type w/finger cont; WECo #100R	Accommodates thermocouple	2Z8674.112
S-1	SWITCH, rotary: 5 position; 6 sect; WECo #KS-7884	Calibrate-measure switch	
E-1	THERMOCOUPLES: WECo #22AM	In the current-measuring circuit feeds current to the meter.	3F4503

INDEX

	Paragraph	Page
Adjust-compare key	11*a*	9
Adjustments:		
Meter pointer	11*a*	9
Parts	63	63
Attenuators	11*a*, 16*d*, 52*a*, 52*f*	9, 15, 51
Battery:		
Description	4*b*	3
Function	52*c*	51
Installation of	9*f*	8
Key	11*a*, 52*d*	9, 51
Maintenance	58*a*	57
Calibrate-measure switch	11*a*, 52*e*	9, 51
Calibration:		
Circuit	65	66
Meter scale	31	37
Power for	55	55
Procedure	14	13
Case, carrying	4*a*	3
Characteristics:		
Performance	6*b*	5
Technical	6*a*	5
Circuits:		
Calibration	65	66
Circuit data	64	66
Comparison	5*b*, 66	3, 68
Current measuring	5*a*	3
Tracing	67	69
Cleaning	59	58
Coils:		
Measuring losses of	30	36
Repeating	6*a*	5
Connections	13*b*	13
Controls	11	9
Cords, patching	4*b*	3
Measuring losses of	30	36
Desert maintenance	4*a*	3
Dimensions	36*d*	41
Disassembly	app. I	72
Equipment performance checklist	33	39
Final testing	68, 69	69, 70

	Paragraph	Page
Fits:		
General	62	63
Jacks	63*c*	65
Keys	63*b*	63
Frequency	3*a*	2
Functioning of TS-569/FT	48	49
Gain measurements:		
At zero power on —		
135-ohm circuits	17	15
600-ohm circuits	18	17
Exceeding 0 dbm on —		
135-ohm circuits	19	18
600-ohm circuits	20	19
Theory	49	49
Grounding	13*a*, 16*b*	13, 15
Identification table of parts	app. II	73
Inspecting	57	55
Instruments	11	9
Jacks	11*b*, 52*j*, 58*c*, 63*c*	11, 53, 58, 65
Keys:	58*c*, 63*c*	
Adjust-compare	11*a*, 52*b*,	9, 51
Adjustments	63*b*	63
Battery	11*a*, 52*d*	9, 51
Meter damping	11*a*	9
Meter protection pad	11*a*, 16*c*, 52*g*	9, 15, 51
Repairing	63*b*	63
30-db in attenuator	11*a*, 52*f*	9, 51
Line loss measurements:		
135-ohm circuits	21	21
600-ohm circuits	22	22
Theory	51	50
Loss measurements:		
Coils	30	36
Exceeding 10 db on —		
135-ohm circuits	27	30
600-ohm circuits	28	32
Less than 10 db on —		
135-ohm circuits	25	27
600-ohm circuits	26	28
Lines	30	36
Patching cords	30	36
600-ohm circuits using 600-ohm amplifier	29	34
Theory	49	49
Lubricants	35, 36*e*	41
Maintenance:		
Desert	36*d*	41
Preventive	38–41	42
Tropical	36*b*	41
Winter	36*c*	41

	Paragraph	Page
Materials	53*b*	54
Measurements (*see also* Gain, Line loss, Loss, and Power measurements)	3,	2
Meter:		
Damping key	11*a*	9
Function	11*b*, 52*h*	11, 51
Protection pads	11*a*, 16*c*, 52*g*	9, 15, 51
Reading	16*a*	15
Scale	31	37
Operation:		
General	15	14
Under unusual conditions	34	40
Oscillator TS-401/U	46, 47	48
Packaging data	7	6
Painting	37	41
Patching cords:		
Description	4*b*	3
Losses in	30	36
Potentiometers:		
Dial 1, 2, and 3	11*a*, 52*k*	9, 53
Test current	11*a*, 52*l*	9, 53
Power	55, 56	55
Power measurements:		
135-ohm circuits	17	15
600-ohm circuits	18	17
Theory	50	50
Precautions, test	16	15
Preventive maintenance	38–41	42
Protection pads, meter	11*a*, 16*c*, 52*g*	9, 15, 51
References	app II	73
Refinishing	70	71
Repacking	app I	72
Repair	57*b*	56
Rustproofing	37	41
Shipment and storage	app I	72
Switch, calibrate-measure	11*a*, 52*e*	9, 51
Test equipment	54	55
Test precautions	16	15
Testing, final	68, 69	69, 70
Thermocouple	11*a*, 16*h*, 52*i*, 58*b*	9, 15, 51, 57
Tolerances:	52*i*, 58*b*	
General	62	63
Jacks	63*c*	65
Keys	63*b*	63
Tools	53*a*	53
Tracing circuits	67	69
Tropical maintenance	36*b*	41
Trouble location	60–61	59
Trouble shooting	42–45	45

	Paragraph	Page
Unpacking	8	7
Unsatisfactory report	2*a*	1
Winter maintenance	36*c*	41
Wiring	71	71

☆ U. S. GOVERNMENT PRINTING OFFICE: 1949—838806